SNC CO.,LTD.

A COMPANY PRECEPT

正

Having honest thinking
With proper behavior
Lead an honest life

Our motto is honesty and it has built the trust of customers for 40 years through 3 generations.

In 2006, SNC has equipped with Hot dip galvanized facility by Korea-Japan joint venture, and we have been become to process non-stop production design, production, galvanizing and packing.

SNC manufactures cable tray system and electric industrial facility for power plants, steel mill plants, chemical plants and shipbuilding yards.
We will try our best to have the best quality by accumulated knowhow that is based on the quality control & management philosophy and R&D.

Promise that we will provide the best products through endless efforts and wishes!

PRESIDENT J. S. KIM

2006 ~2009

2006. 04. ESTABLISHED SNC CO.,LTD.
2007. 05. ISO 9001 : 2000 CERTIFIED
2008. 04. RECEIVED "LETTER OF APPRECIATION" FROM MITSUBISHI ELECTRIC CORPORATION
2008. 12. KOREAN STANDARD CERTIFIED

2010~

2010. 04. WPS QUALIFIED BY ABS
2010. 12. RECEIVED A COMMENDATION FROM GIMHAE MAYOR
2010. 12. MADE SUPPLY AGREEMENT WITH EATON B-LINE
2011. 06. ESTABLISHED R&D CENTER
2012. 12. AWARDED "49nd TRADE DAY TEN MILLION DOLLARS EXPORT TROPHY"
2013. 11. RECEIVED "QC AWARD" FROM TOSHIBA PLANT SYSTEMS & SERVICES CORPORATION
2014. 02. RECEIVED "LETTER OF APPRECIATION" FROM MITSUBISHI ELECTRIC CORPORATION

TABLE OF CONTENTS

SNC

CABLE TRAY SYSTEM

STEEL STRUCTURE HOT DIP GALVANIZING

1. Definition of Cable Trays

Cable Tray System

Cable tray is a mechanical support system that can support cables and raceways. Cable tray is not a raceway. Cable tray systems are required to be electrically continuous but not mechanically continuous.

Cable Tray Types

Ladder Type

Ladder Type Cable Tray offer strength and high capacity and thus are well suited to heavy duty power distribution in industrial facilities. Ladder, however, do not offer ether wire and cable management flexibility of perforated type cable tray, since cable must be pulled rather than laid in place.

Trough Type

A trough type cable tray is a prefabricated metal structure greater than 4 inches width consisting of a ventilated bottom within integral of separate longitudinal side rails.

Solid bottom Type

A solid bottom type cable tray is a prefabricated metal structure consisting of a bottom with no openings within integral or solid bottom channel section.

Channel Type(Raceway)

This type of "decorative" conduit is designed to provide an aesthetically acceptable passageway for wiring without hiding it inside or behind a wall. This is used where additional wiring is required, but where going through a wall would be difficult or require remodeling. The conduit has an open back and is placed over the wire and secured to the surface.

Perforated Type

Perforated Cable Tray offer an effective way to mange wiring while keeping it accessible, organized and secure. These systems accommodates large no of branch lines and offer high load–bearing capacity. Technician can install one or more dividers to separate power and data lines and organize cabling. For added cabling protection, perforated cable tray can be specified with or without covers. Ventilated louvers can also be specified to facilitate cooling by natural convection while keeping conductors enclosed and protected. Perforated cable tray may be hung using either a center rod support, C–hanger, or two hanger trapeze configuration and they can also be wall mounted using brackets.

Allowable Cable Fill

Data telephone and instrument cable should be calculated to fill tray to 50% of the tray cross section fill area (40% for solid bottom type tray). In reality, because of voids, overlapping and the circular sharp of the cable a 50% fill will normally completely fill the cable tray.

i) MC cable 4/0 or larger, rated 2000 Volts or less, can only be installed in one layer (sum of cable diameters equals tray width).

ii) Single conductor 2000 Volts or less, larger than 1000 KCM can only be installed in one layer (sum of cable diameters equals tray width).

iii) Other power cables and combinations of sizes are calculated on the sum of cable areas versus allowable fill, see table NEC 392.9 to determine tray width. NEC 392 details cable types, voltage, ampere, etc.

2. Material and Finish

The following factors should be consider when determining the appropriate cable tray system

Applicable Codes & Standards

All equipment material and workmanship shall comply with the requirement and latest revisions of the following standards and cods where applicable.

Cable Tray Systems
IEC, ISO, KS, JIS, CSA, BS, DIN, ANSI, NEMA, ASTM, ASME, AISI, UL, AWS, Etc.
IEC 61537 Cable tray systems and cable ladder systems for cable management
NEMA VE–1 Metal Cable Tray Systems
NEMA FG–1 Fiberglass Cable Tray Systems
NEMA VE–2 Cable Tray Installation Guidelines

Material		Codes & Standards
Steel	Rolled Steel for General Structure	KS D 3503 SS400, JIS G 3101 SS400
	Hot–rolled mild steel	KS D 3501 SPHC, JIS G 3131 SPHC
	Carbon Steel	ASTM A 36
	Cold Rolled Steel	KS D 3512 SPCC, JIS G 3141 SPCC, ASTM A 1008 CS
Steel Stainless	Type 316L	KS D 3698 STS316L, JIS D 4305 SUS316L, ASTM A240 316L, AISI Type 316L
	Type 316	KS D 3698 STS316, JIS D 4305 SUS316, ASTM A240 316, AISI Type 316
	Type 304	KS D 3698 STS304, JIS D 4305 SUS304, ASTM A240 304, AISI Type 304
Hot–dip Zinc–coated Steel		KS D 3506 SGHC, JIS G 3302 SGHC, ASTM A653 SS33
Electrolytic Zinc–coated Steel		KS D 3528, JIS G 3313

Finsh	Applicable Material	Codes & Standards
Hot–dip Galvanizing	Steel	KS D 8308, JIS H 8641, ASTM A123, ISO 1461, BS 729
Hot–dip Zinc–coated Steel	Steel	KS D 3506 Z08~Z27, JIS G 3302 Z08~Z27, SATM A653 Z90~Z275
Special Coating	Steel, Galvanized Steel, Stainless Steel	Customer's Specification
Acid Picking	Stainless Steel	

Corrosive Resistance

All metal surfaces that exposed to the environment are affected b corrosion. Materials do not respond in a similar manner to different corrosive environments. The designer must make the final selection based on his knowledge of the various chemical elements affecting his system.

There four(4) main types of corrosion;

i) Atmospheric Corrosion
ii) Chemical Corrosion
iii) Storage Corrosion
iv) Galvanic Corrosion

Thermal Expansion and Contraction

The tray run should be allowed longitudinal movement in both direction from fixed points tow arols expansion splice plates. To determine the correct gap setting is necessary to ensure proper operation of the expansion splice plates.

3. Loading Possibilities

Strength

The strength of a cable tray is largely determined by the strength of its side rails.
(see Design Factor Ix, Sx)

Cable Load

The weight of cable itself should be considered.

Environment Loads (Wind, Ice and Snow)

These factors should be considered when the tray system or part of the system is installed out–doors, Ice and Snow load calculations are especially important when the tray is covered.

i) Wind Load : 120 kms/hour of wind = 11 kgs/0.09 m2 pressure
ii) Ice Load : 12~13 mm of ice on all surfaces weights on average 1.1 kgs/0.9 m2 of surface area.
iii) Snow Load : Snow loads are dependent upon the latitude and altitude of the particular job site.
Snow is considered to be a uniformly distributed load.
iv) Seismic Loads

A great deal of seismic testing and evaluation of cable tray systems, and their supports, has been performed.
(Consults SNC)

Concentrated Loads

A concentrated static load represents a static weight applied at a single point between the side rails. When so specified, the concentrated static loads may be converted to an equivalent, uniform load (We) by using the following formula:

$$We = \frac{2 \times (\text{ concentrated static load })}{\text{span length}} \qquad (\text{ NEMA VE - 1 })$$

Support Span

The support span should not be greater than the length of the tray. When tray is supported as a simple beam, the load causes bending moments all along the beam resulting in downward vertical deflection inducting stress in the beam. The strength of a cable tray system can be altered by changing the support span.

Deflection

Deflection in a cable tray system is primarily an aesthetic consideration. When a cable tray system is installed in a prominent location, a maximum simple beam deflection of 1/200 of support span can be used as a guideline to mini–mize visual deflection. It is important at this point to mention that there are two typical beam configurations, simple beam, and continuous beam, and to clarify the difference.
When cable trays of identical design are compared, the continuous beam installation will typically have approximately 1/2 the deflection of a simple beam of the same span.

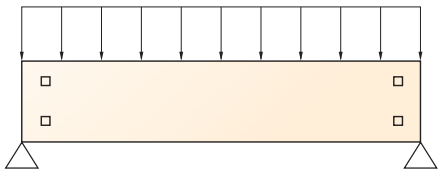

Simple Beam

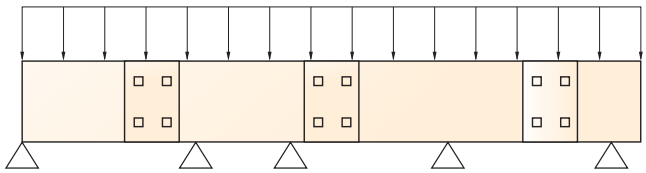

Continuous Beam

Safety Factor

All loads stated in the SNC catalog have a 1.5 safety factor, in accordance with the NEMA VE – 1 Guidelines.
A safety factor is the reserve strength, above the actual cable loading, for which a tray system was designed.
To convert the load carrying capabilities, as listed in this catalog, to a 2.0 safety factor, multiply the loads by 0.75.

Load Capacity

Calculate each anticipated load fact, then add them to obtain a total load.
(Example : Working Load = Cable + Concentrated + Wind + Snow + Ice Loads).
The Working Load should be used, along with the maximum support spacing, to select a span/load class from Table

Working Load Lbs/Ft (kg/m)	Support Span, Feet (Meters)				
	8ft (2.4m)	10ft (3m)	12ft (3.7m)	16ft (4.9m)	20ft (6.0m)
25(37)	–	A	–	–	–
45(67)	–	–	–	–	D
50(74)	8A	–	12A	16A	20A
65(97)	–	C	–	–	–
75(112)	8B	–	12B	16B	E or 20B
100(149)	8C	–	12C	16C	20C
120(179)	–	D	–	–	–
200(299)	–	E	–	–	–

LOAD/SPAN CLASS DESIGNATIONS
Per NEMA VE1 / CSA C22.2 No.126

Working Load : Total load of cables installed and uniformly distributed in the cable tray.

Classes 8, 12, 16, 20 / A, B, C : NEMA VE – 1
Classes A, C, D and E : CSA c 22.2 No.126

4. Other Loading Considerations

Support Span

The distance between the supports affects the loading capabilities exponentially. To calculate loading values not cataloged use :

$$W1\ L1^2 = W2\ L2^2$$

- W1: Tested loading
- L1: Span in feet, a tested span
- W2: Loading in question
- L2: Known span for new loading

If a 20 C system is manufactured in 12 foot sections the greatest span for supports would be 12 feet.
This dramatically affects the loading of the system.

$$W1L1^2 = W2L2^2$$
$$100\ (20^2) = W2\ (12^2)$$
$$W2 = 277 \text{ lbs Per foot}$$

Fitting Radius

The fitting radius should be equal to a larger than the minimum bend radius of the largest cable which may ever be installed in the system.

All trays meet or exceed NEMA VE –1 standards and NEC Article 392.

What is continuous zinc galvanizing?

Paint coating and continuous zinc galvanizing

There are three ways of surface treatment to prevent the corrosion of iron, which include coating of rust prevention oil, thermal spray coating, paint coating, zinc galvanizing, etc. Out of those, the ways generally used can be classified into continuous zinc galvanizing and electrolytic galvanizing. The electrolytic galvanizing is mainly used in plating of electric and electronic parts and indoor iron goods, which is a way to prevent rust with its fine and solid protective coating made through the alloy of surface of iron basis and zinc.

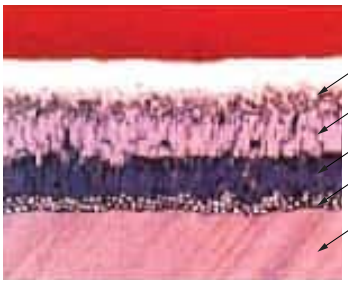

The paint coating is a way to prevent the rust by blocking the oxygen and moisture in the air off the surface of iron, where the paint and iron basis is not chemically combined but just coated on the iron basis, which may cause easy damage or abrasion, without any chemical rust prevention function. The continuous zinc galvanizing is a way of a sacrificial rust prevention function, which protects the damaged iron basis if the surface of iron gets damaged, which suppresses corrosion. However, the paint coating just blocks the water and oxygen, the cause of rust, off the surface of iron, and for this reason, if the iron basis is exposed because of damage to the coating, the rust may rapidly spread to the inside as there is no capability to protect the iron.

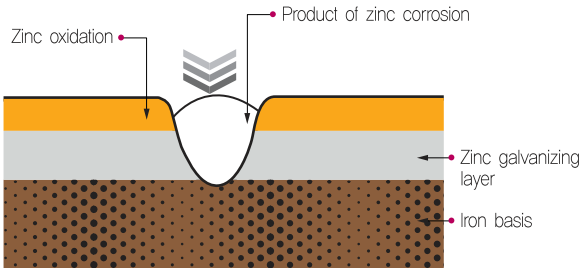

In case of zinc galvanizing

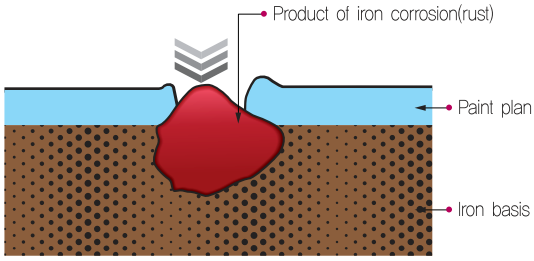

In case of painting

Economical efficiency of continuous zinc galvanizinga

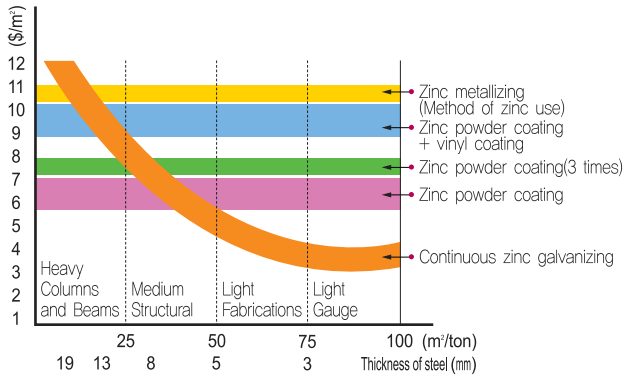

Initial cost for each kind of coating in respect of iron structures

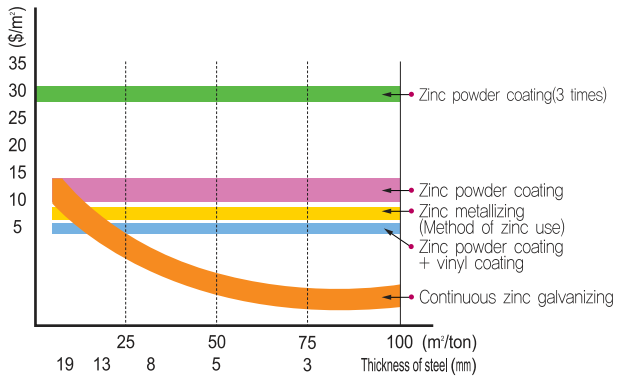

Initial cost for each kind of coating when calculated for the period of 25 years

Initial cost

Because of the constant rise of labor cost, the total cost of other coating method has greatly increased comparing with that of continuous zinc galvanizing, and for this reason, the economical efficiency of continuous zinc galvanizing has much improved.

Economical efficiency in consideration of use period

As for the continuous zinc galvanizing, as its life span is considerably longer and as it does not need any repairs, it is very economical because of the saving of repair and labor cost when considering the time until the repairs and the repairing cost.

Economical efficiency of continuous zinc galvanizinga

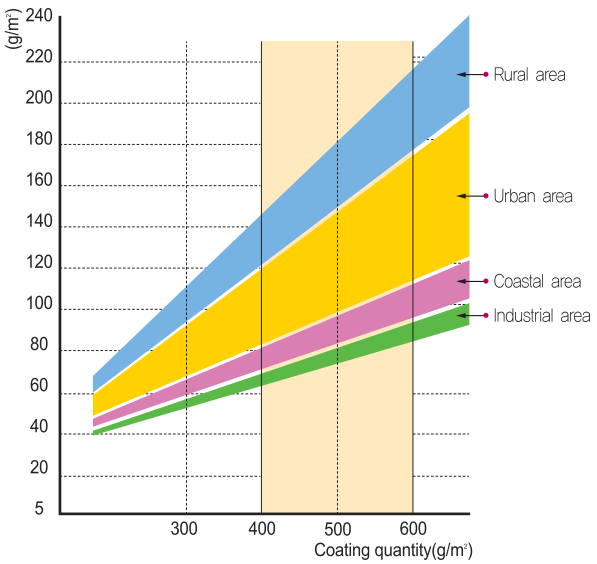

Relation between the thickness of zinc coating and durable year

The corrosion resistance is superior

Not only by its fine plating coating but by electric and chemical function, the steel products can be completely protected in the air, seawater, the ground and inside the concrete.

It has sacrificial rust prevention function

The plated layer does not get removed due to impact or friction while being transported, constructed or used. Further, even if the plated layer gets removed and the surface of a steel material is exposed in the air, the corrosion of such steel material can be prevented because of the sacrificial rust prevention function of zinc

It makes perfect and uniform plating

It makes perfect and uniform plating not only for a corner where the plating is impossible by means of other coating methods but also for the products with complicated structure.

SNC Hot Dip Galvanizing

Galvanizing Process

1.Heat Treatiment Furnace

2.Galvanizing Ready

3.Degreasing Tank

5.Pickling Tank

6.Water Rinsing

7.Fluxing Tank

9.Cooling Tank 1

10.Cooling Tank 2

11.Finising.Inspection

4.Water Rinsing

8.Galvanizing Tank

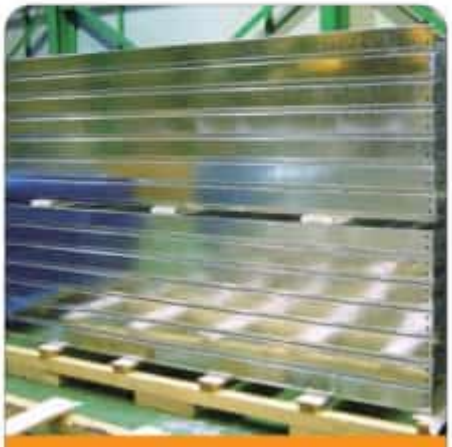

12.Product Packaging

Warehosing

- Heat Treatiment Furnace
- Galvanizing Ready
- Degreasing Tank 1
- Degreasing Tank 2
- Water Rinsing

Galvanizing Process 8500(L) X2000(L) X2500(H)

- Pickling Tank 1
- Pickling Tank 2
- Pickling Tank 3
- Pickling Tank 4
- Pickling Tank 5
- Water Rinsing
- Fluxing Tank
- Galvanizing Tank

Forwarding

- Cooling Tank 1
- Cooling Tank 2
- Product Packaging

Galvanizing Equipment

Item	Specificaliau	Quantity
1. Galvanizing Tank	2000(W) × 2500(H) × 8500(L)	1set
2. Heat Treatiment Furnace	2500(W) × 2000(H) × 7000(L)	1set
3. Degreasing Tank	2000(W) × 2200(H) × 9000(L)	2set
4. Water Rinsing Tank–degrease	2000(W) × 2200(H) × 8500(L)	1set
5. Pickling Tank	2000(W) × 2200(H) × 8500(L)	5set
6. Water Rinsing Tank–acid	2000(W) × 2200(H) × 8500(L)	1set
7. Fluxing Tank	2000(W) × 2200(H) × 8500(L)	1set
8. Cooling Tank 1	2000(W) × 2200(H) × 8500(L)	1set
9. Cooling Tank 2	2000(W) × 2200(H) × 8500(L)	1set
10. Crain	2.5ton	6set
11. Hoist	3ton + 3ton	9set

Environmental Equipment

Item	Specificaliau	Model	Quantity	Origin
Bag Filte	1340㎥/min	LT420200–B	1set	Japan
Scrubber(Pickling)	900㎥/min	TES–900	2set	Japan
Scrubber(Pickling)	500㎥/min	TES–500	1set	Japan
Scrubber(Fluxing)	500㎥/min	TES–500	1set	Japan
Scrubber(Degrease)	900㎥/min		1set	Korea
Drainage System	50㎥/day		1set	Korea
TMS			1set	Korea

Inspection Equipment

Item	Specificaliau	Accvracy
Coating Thickness Gavge	0~1500㎛	100/25㎛
PH Meter	0.00~14.00ph	0.01ph/0.1℃
Electronic Scale	3200g	0.01g
Hot Air Dryer	91.125㎤	0.1℃
Salt Water Sprayer	50℃±1℃	
Sample Cutting Machine	300₵x25.4x1.2T	
Sample Forming Machine	RA-SS-1000 btl	
Polishing Machine	200₵	
Heating Machine	Amb 5~150℃	
Automatic Titrator		
Metal Microscope		
Atomic Absorption Spectrometer	185~900㎚	

KSA
ISO 9001 CERTIFIED

Korea Accreditation Board
KAB
한국인정지원센터

FOUNDED 1862
ABS®
WPS CERTIFIED

MEMO

2. Ladder Tray

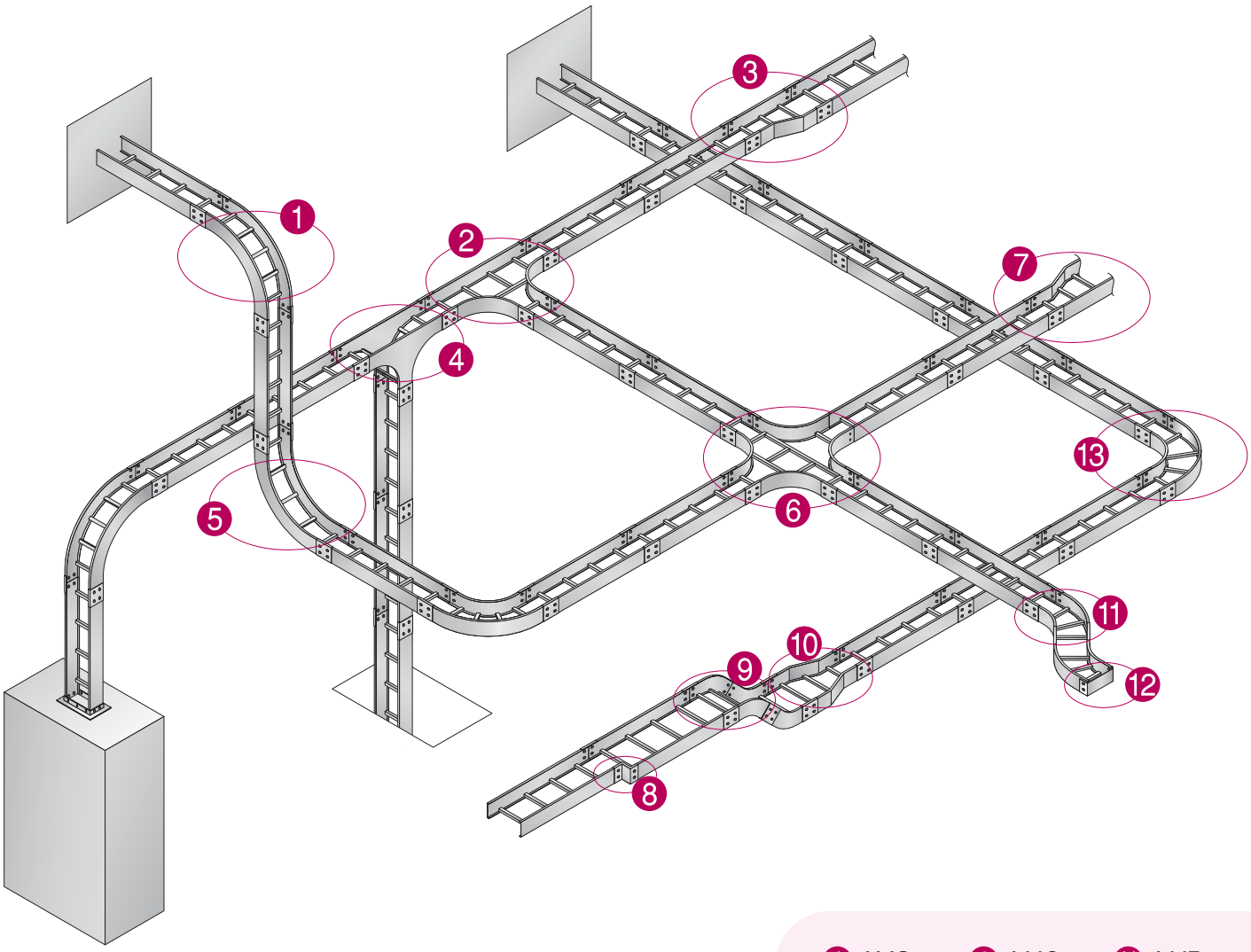

1 LVO	6 LHC	11 LHB
2 LHT	7 LLR	12 EP
3 LRR	8 LRRC	13 LHB
4 LVT	9 LVO	
5 LVI	10 LSR	

Specification Numbering

S A 6 R 1 – C S 3 0

- **SA1~9**
- **SB1~19**
- **SD1~6**
- **SG1**

- **R1~3**

- **CS**-Carbon Steel
- **HGI**-Hot-dip Zinc-coated Steel
- **SUS**-Stainless Steel

- Rung Span

Item Numbering

L 90 H B – 30 10 R 30

- **L** : Ladder

- **ST** : Straight
- **90~30HB** : 90°~30° Horizontal bend
- **HT** : Horizontal tee
- **HC** : Horizontal cross
- **HO** : Horizontal offset
- **VT** : Vertical tee
- **90° ~30° VI** : 90°~30° Vertical inside
- **90° ~30° VO** : 90°~30° Vertical outside

- Width

- Height

- **R30** : Radius 300mm
- **R40** : Radius 400mm
- **R60** : Radius 600mm
- **C30** : Square 300mm
- **C40** : Square 400mm
- **C60** : Square 600mm
- **L24** : Length 2400mm
- **L30** : Length 3000mm
- **L60** : Length 6000mm

Ladder Straight Tray

- Material : Carbon Steel
  Stainless Steel
  Hot–dip Zinc–coated Steel
- Fabrication : Electro ARC of CO2, TIG Welding or Argon Welding
- Finish : Hot Dip Galvanizing
  Acid Pickling after Fabrication
  Anodic Oxidation
  Paint
  Natural

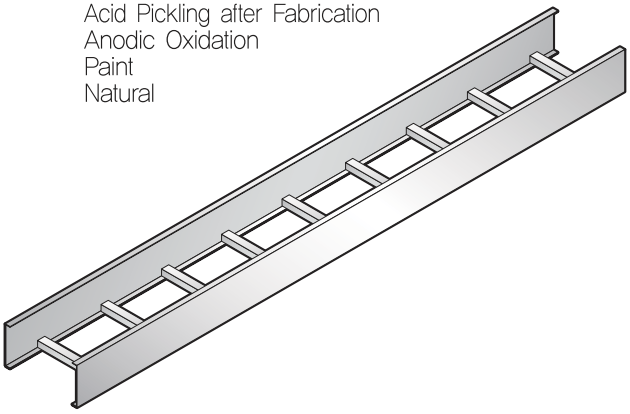

Ladder Straight Tray (Aluminum)

- Material : Aluminium Alloy 6063s–T5 (KSD 6759)
- Finish : Anodic Oxidation
- Fabrication : Tapping Screw
- Standard Length : 3,000mm

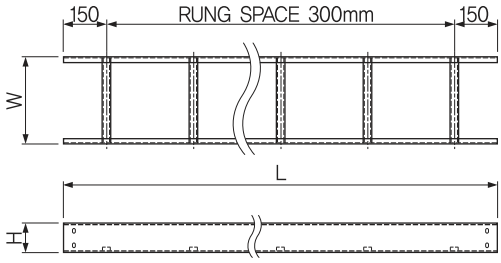

ST

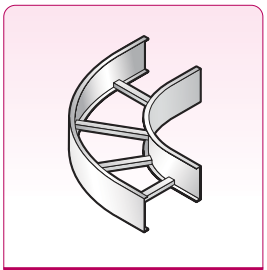

90HB

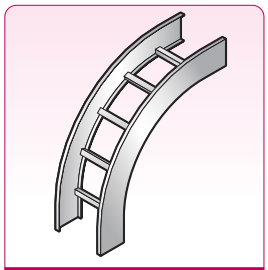

90VO

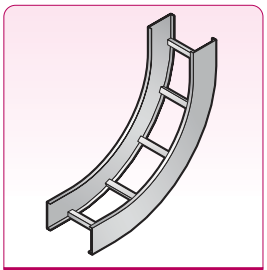

90VI

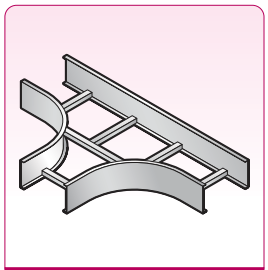

HT

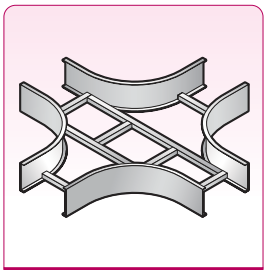

HC

JOINT HOLE ROUND(SQUARE) TYPE

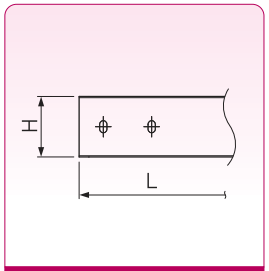

HRA

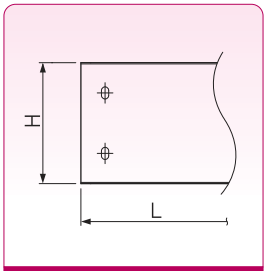

HRB

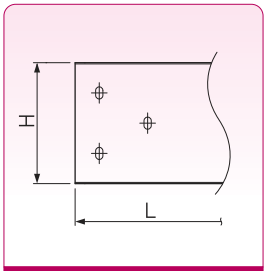

HRC

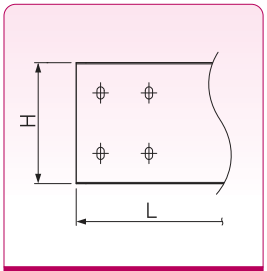

HRD

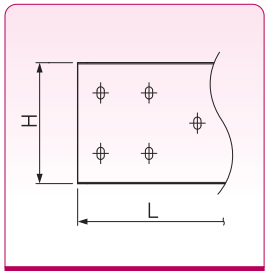

HRE

■ Design Data for one Rail

Steel Plates Bare	Prefix	Material Type	A(mm)	B(mm)	C(mm)	D(mm)	Sx(cm³)	Ix(cm⁴)	Area(cm²)
SA	SA1	CS, SUS	20	70	1.6(1.5)		3.27	11.45	1.71
	SA2	CS, SUS	20	70	2.0		4.01	14.04	2.12
	SA3	CS, SUS	20	100	2.0		6.79	33.96	2.72
	SA4	CS, SUS	20	100	2.3(2.5)		7.72	38.60	3.11
	SA5	CS, SUS	20	150	2.0		12.75	95.68	3.72
	SA6	CS, SUS	20	150	2.3(2.5)		14.55	109.10	4.26
	SA7	CS	20	150	3.2		19.73	147.94	5.87
	SA8	CS, SUS	40	200	2.3(2.5)		23.29	232.90	5.41
	SA9	CS	20	200	3.2		31.75	317.45	7.47
SB	SB1	CS, SUS	20	100	2.0	20	6.92	33.96	2.72
	SB2	CS, SUS	20	100	2.3(2.5)	20	7.88	38.60	3.11
	SB3	CS, SUS	20	120	2.0	25	10.08	57.24	3.22
	SB4	CS, SUS	20	120	2.3(2.5)	25	11.54	65.18	3.68
	SB5	CS, SUS	20	100	2.0	25	7.74	36.27	2.82
	SB6	CS, SUS	20	100	2.3(2.5)	25	8.82	41.25	3.22
	SB7	CS, SUS	20	150	2.0	25	14.09	101.01	3.82
	SB8	CS, SUS	20	150	2.3(2.5)	25	16.11	115.20	4.38
	SB9	CS	20	150	3.2	25	22.02	156.33	6.04
	SB10	CS, SUS	20	200	2.3(2.5)	25	25.31	243.90	5.53
	SB11	CS	20	200	3.2	25	34.70	332.62	7.64
	SB12	CS, SUS	25	100	2.0	25	8.05	38.76	2.92
	SB13	CS, SUS	25	100	2.3(2.5)	25	9.20	44.09	3.34
	SB14	CS, SUS	25	120	2.0	25	10.46	60.83	3.32
	SB15	CS, SUS	25	120	2.3(2.5)	25	11.97	69.29	3.80
	SB16	CS, SUS	30	100	2.0	30	9.32	43.56	3.12
	SB17	CS, SUS	30	100	2.3(2.5)	30	10.71	49.58	3.57
	SB18	CS, SUS	30	120	2.0	30	11.95	67.79	3.52
	SB19	CS, SUS	30	120	2.3(2.5)	30	13.72	77.26	4.03

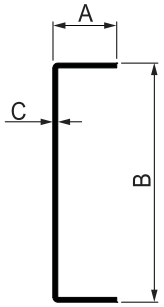

- A : Flange Width
- B : Height
- C : Thickness

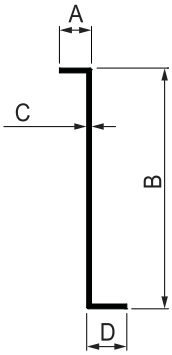

- A,D : Flange Width
- B : Height
- C : Thickness

Design Data for one Rail

Steel Plates Bare	Prefix	Material Type	A(mm)	B(mm)	C(mm)	D(mm)	Sx(cm³)	Ix(cm⁴)	Area(cm²)
SD 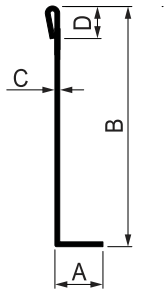	SD1	CS, SUS	20	100	2.0	13	6.41	30.26	2.63
	SD2	CS, SUS	20	100	2.3(2.5)	13	7.30	34.5	3.01
	SD3	CS, SUS	20	150	2.0	13	12.23	88.31	3.63
	SD4	CS, SUS	20	150	2.3(2.5)	13	13.98	100.71	4.16
	SD5	CS, SUS	20	200	2.0	13	19.72	191.68	4.63
	SD6	CS, SUS	20	200	2.3(2.5)	13	22.57	219.31	5.31
SG 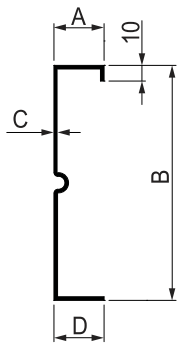	SG1	CS, SUS	32	150	2.3(2.5)	32	19.70	147.70	5.19

- A,D : Flange Width
- B : Height
- C : Thickness

Design Data for Rung

Rung Type	SNC Series	Material Type	A(mm)	B(mm)	C(mm)	D(mm)	Sx(cm³)	Ix(cm⁴)	Area(cm²)
R1 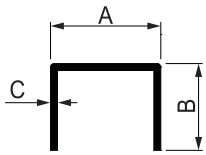	R11	CS, SUS	30	25	2.0		0.59	0.97	1.52
	R12	CS, SUS	30	25	2.3(2.5)		0.67	1.10	1.73
	R13	CS	30	25	3.2		0.91	1.45	2.35
	R14	CS, SUS	40	20	2.0		0.41	0.58	1.52
	R15	CS, SUS	40	20	2.3(2.5)		0.46	0.66	1.73
R2 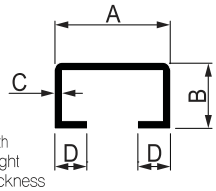	R21	CS, SUS	40	20	2.0	8	1.14	0.94	1.76
	R22	CS, SUS	40	20	2.3	8	1.34	1.03	1.99
	R23	CS, SUS	28	16	1.6(1.5)	8	0.31	0.39	1.09
	R24	CS, SUS	28	16	2.0	8	0.37	0.46	1.34
R3 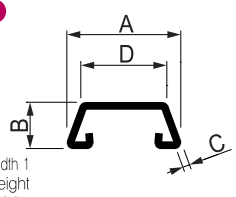	R31	CS, SUS	40	16	2.0	30			
	R32	CS, SUS	50	16	2.0	40			

- A : Width
- B : Height
- C : Thickness
- D : Flange Width

- A : Width 1
- B : Height
- C : Thickness
- D : Width 2

L90HB - 90˚ Horizontal Bend (Elbow)

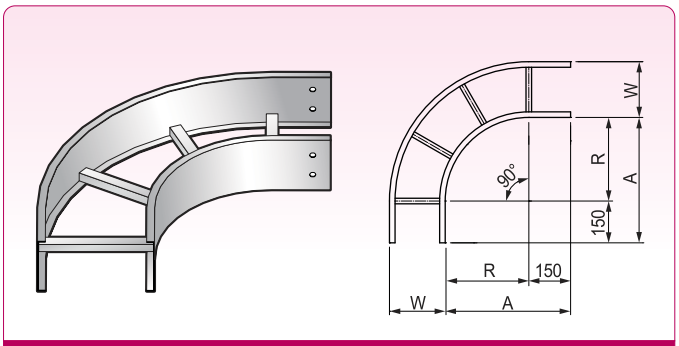

Round Type

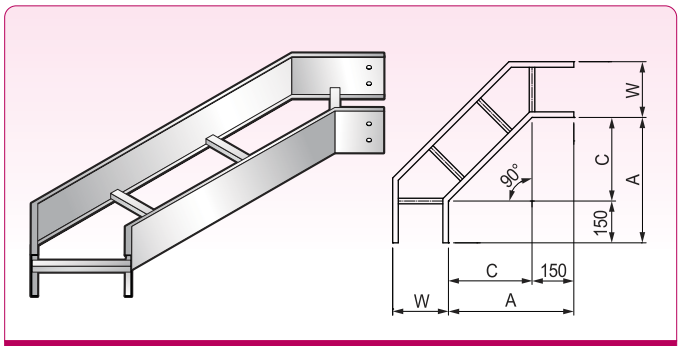

Square Type

W	R & C	90˚ HB DIMENSION A	Item No (Round Type)	Item No (Square Type)
300	300	450	L90HB–30**R30	L90HB–30**C30
	600	750	L90HB–30**R60	L90HB–30**C60
600	300	450	L90HB–60**R30	L90HB–60**C30
	600	750	L90HB–60**R60	L90HB–60**C60
900	300	450	L90HB–90**R30	L90HB–90**C30
	600	750	L90HB–90**R60	L90HB–90**C60

L60HB - 60˚ Horizontal Bend (Elbow)

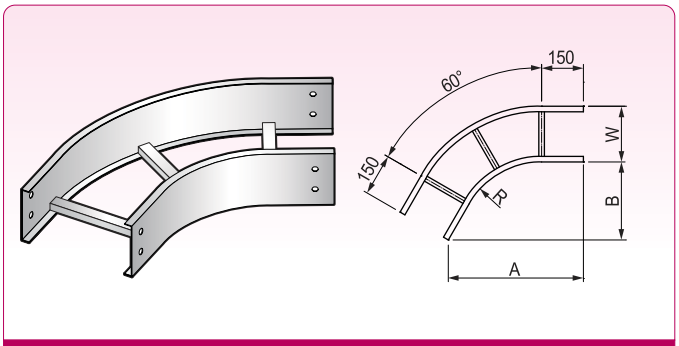

Round Type

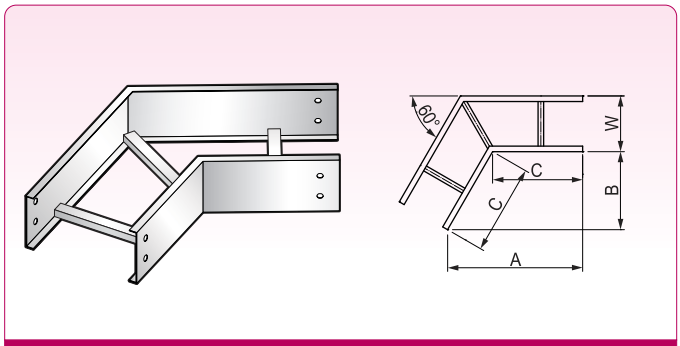

Square Type

W	R	60˚ HB DIMENSION A	B	C	Item No (Round Type)	Item No (Square Type)
300	300	485	280	323	L60HB–30**R30	L60HB–30**
	600	744	430	496	L60HB–30**R60	L60HB–30**
600	300	485	280	323	L60HB–60**R30	L60HB–60**
	600	744	430	496	L60HB–60**R60	L60HB–60**
900	300	485	280	323	L60HB–90**R30	L60HB–90**
	600	744	430	496	L60HB–90**R60	L60HB–90**

L45HB - 45˚ Horizontal Bend (Elbow)

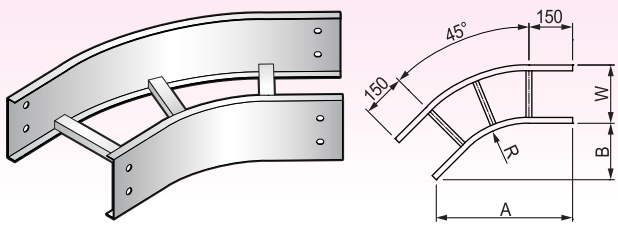

Round Type

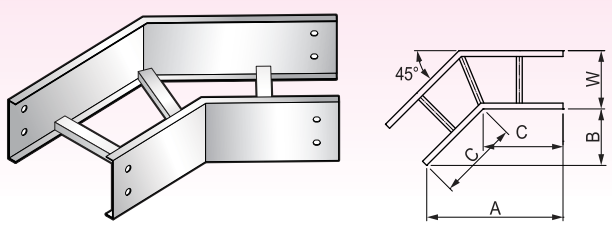

Square Type

W	R	45˚ HB DIMENSION			Item No (Round Type)	Item No (Square Type)
		A	B	C		
300	300	468	194	274	L45HB–30**R30	L45HB–30**
	600	680	282	399	L45HB–30**R60	L45HB–30**
600	300	468	194	274	L45HB–60**R30	L45HB–60**
	600	680	282	399	L45HB–60**R60	L45HB–60**
900	300	468	194	274	L45HB–90**R30	L45HB–90**
	600	680	282	399	L45HB–90**R60	L45HB–90**

L30HB - 30˚ Horizontal Bend (Elbow)

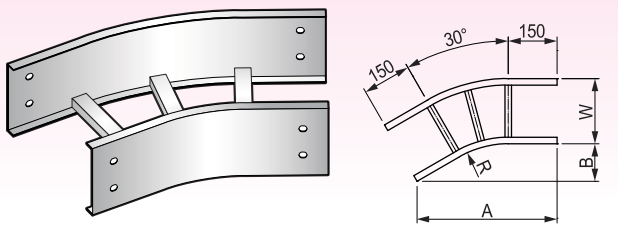

Round Type

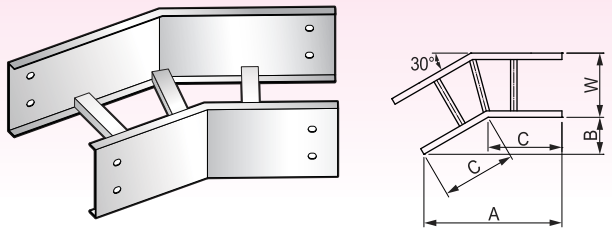

Square Type

W	R	30˚ HB DIMENSION			Item No (Round Type)	Item No (Square Type)
		A	B	C		
300	300	430	115	230	L30HB–30**R30	L30HB–30**
	600	580	155	311	L30HB–30**R60	L30HB–30**
600	300	430	115	230	L30HB–60**R30	L30HB–60**
	600	580	155	311	L30HB–60**R60	L30HB–60**
900	300	430	115	230	L30HB–90**R30	L30HB–90**
	600	580	155	311	L30HB–90**R60	L30HB–90**

L90VO - 90˚ Vertical Outside Bend (Elbow)

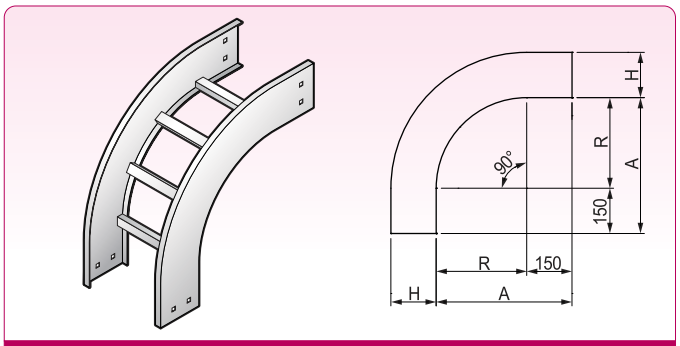

Round Type

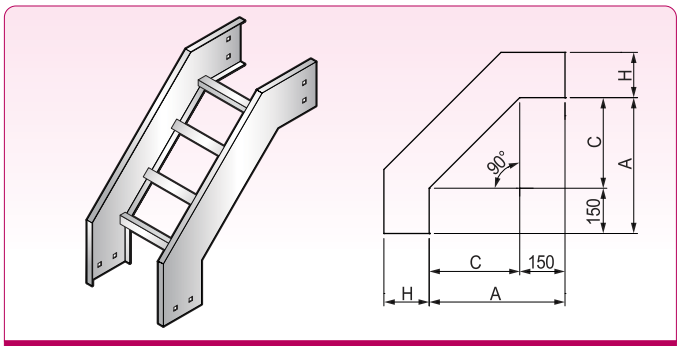

Square Type

W	R & C	90˚ VO DIMENSION A	Item No (Round Type)	Item No (Square Type)
300	300	450	L90VO–30**R30	L90VO–30**C30
	600	750	L90VO–30**R60	L90VO–30**C60
600	300	450	L90VO–60**R30	L90VO–60**C30
	600	750	L90VO–60**R60	L90VO–60**C60
900	300	450	L90VO–90**R30	L90VO–90**C30
	600	750	L90VO–90**R60	L90VO–90**C60

L60VO - 60˚ Vertical Outside Bend (Elbow)

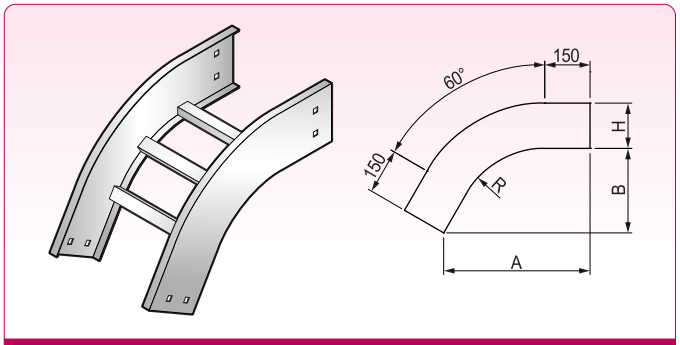

Round Type

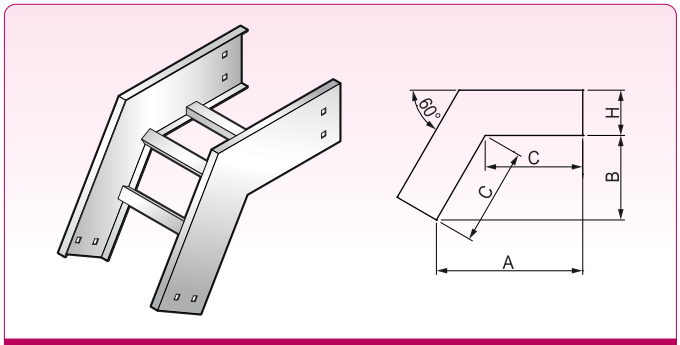

Square Type

W	R	60˚ VO DIMENSION A	B	C	Item No (Round Type)	Item No (Square Type)
300	300	485	280	323	L60VO–30**R30	L60VO–30**
	600	744	430	496	L60VO–30**R60	L60VO–30**
600	300	485	280	323	L60VO–60**R30	L60VO–60**
	600	744	430	496	L60VO–60**R60	L60VO–60**
900	300	485	280	323	L60VO–90**R30	L60VO–90**
	600	744	430	496	L60VO–90**R60	L60VO–90**

L45VO - 45˚ Vertical Outside Bend (Elbow)

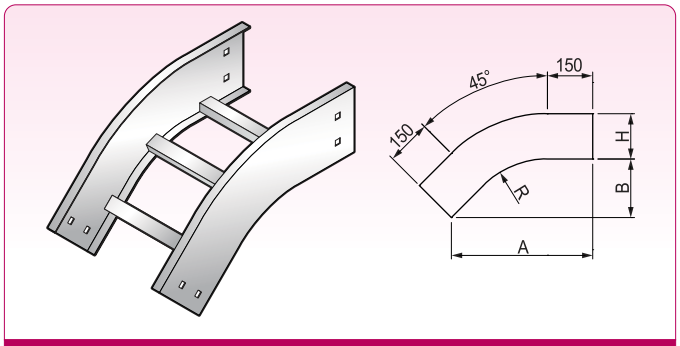

Round Type

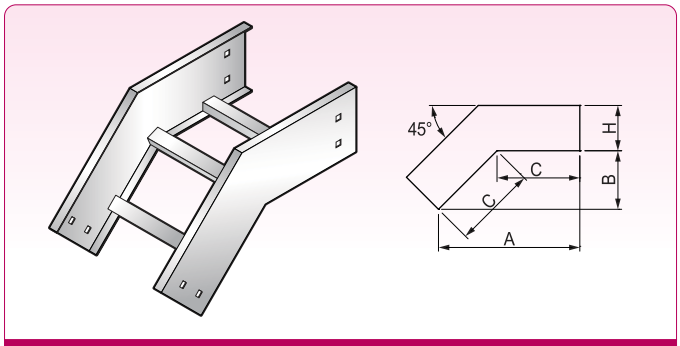

Square Type

W	R	45˚ VO DIMENSION			Item No (Round Type)	Item No (Square Type)
		A	B	C		
300	300	468	194	274	L45VO–30**R30	L45VO–30**
	600	681	282	399	L45VO–30**R60	L45VO–30**
600	300	468	194	274	L45VO–60**R30	L45VO–60**
	600	681	282	399	L45VO–60**R60	L45VO–60**
900	300	468	194	274	L45VO–90**R30	L45VO–90**
	600	681	282	399	L45VO–90**R60	L45VO–90**

L30VO - 30˚ Vertical Outside Bend (Elbow)

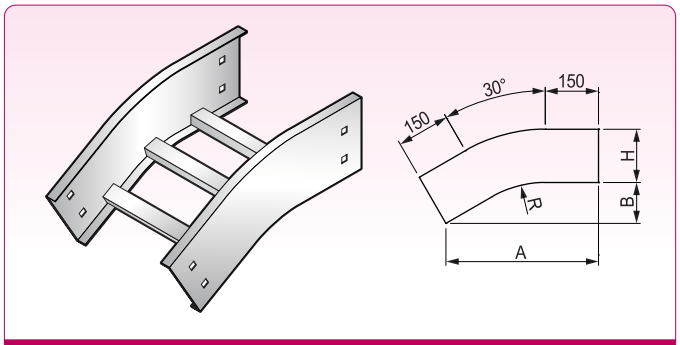

Round Type

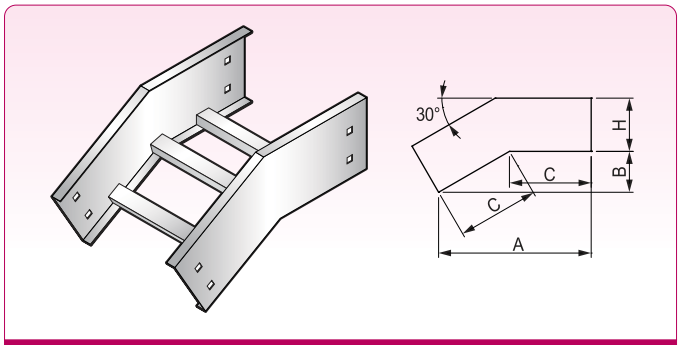

Square Type

W	R	30˚ VO DIMENSION			Item No (Round Type)	Item No (Square Type)
		A	B	C		
300	300	429	115	230	L30VO–30**R30	L30VO–30**
	600	580	156	311	L30VO–30**R60	L30VO–30**
600	300	429	115	230	L30VO–60**R30	L30VO–60**
	600	580	159	311	L30VO–60**R60	L30VO–60**
900	300	429	115	230	L30VO–90**R30	L30VO–90**
	600	580	156	311	L30VO–90**R60	L30VO–90**

L90VI - 90˚ Vertical Inside Bend (Elbow)

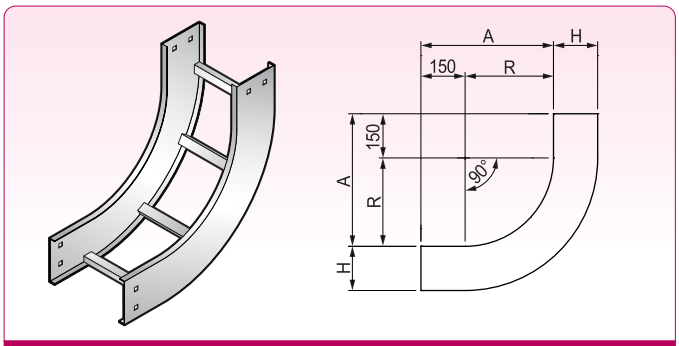

Round Type

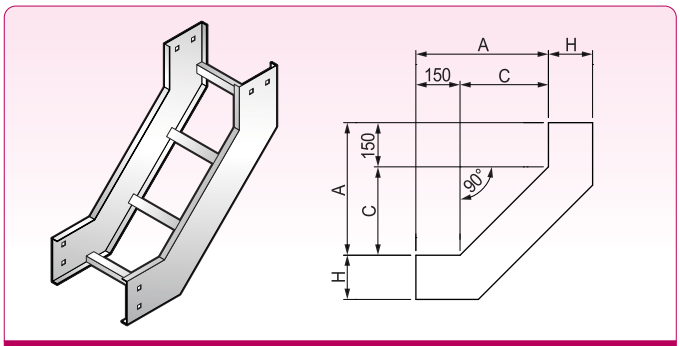

Square Type

W	R & C	90˚ VI DIMENSION A	Item No (Round Type)	Item No (Square Type)
300	300	450	L90VI–30**R30	L90VI–30**C30
	600	750	L90VI–30**R60	L90VI–30**C60
600	300	450	L90VI–60**R30	L90VI–60**C30
	600	750	L90VI–60**R60	L90VI–60**C60
900	300	450	L90VI–90**R30	L90VI–90**C30
	600	750	L90VI–90**R60	L90VI–90**C60

L60VI - 60˚ Vertical Inside Bend (Elbow)

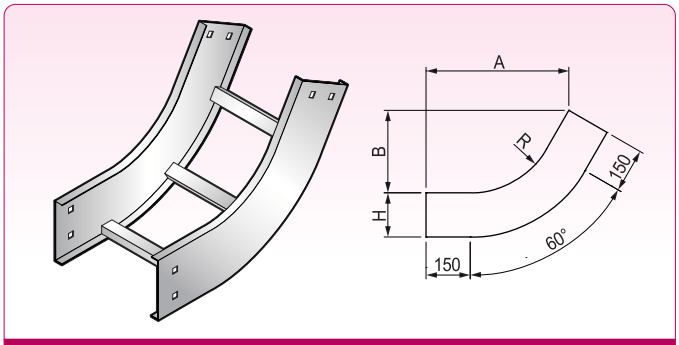

Round Type

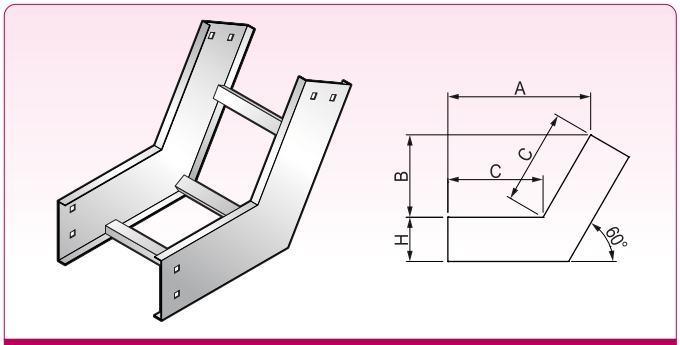

Square Type

W	R	60˚ VI DIMENSION A	B	C	Item No (Round Type)	Item No (Square Type)
300	300	485	280	323	L60VI–30**R30	L60VI–30**
	600	744	430	496	L60VI–30**R60	L60VI–30**
600	300	485	280	323	L60VI–60**R30	L60VI–60**
	600	744	430	496	L60VI–60**R60	L60VI–60**
900	300	485	280	323	L60VI–90**R30	L60VI–90**
	600	744	430	496	L60VI–90**R60	L60VI–90**

L45VI - 45˚ Vertical Inside Bend (Elbow)

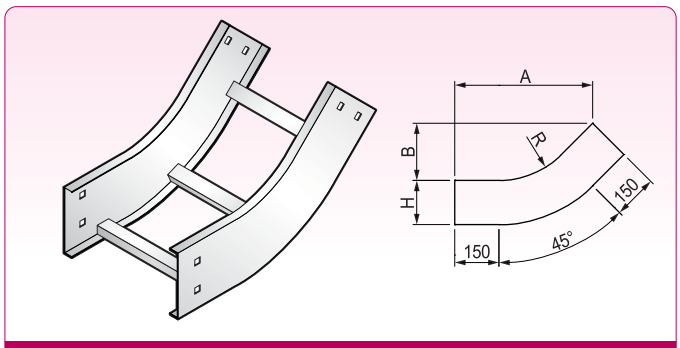

Round Type

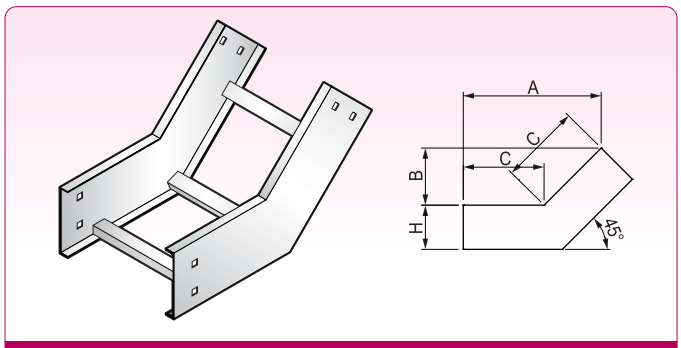

Square Type

W	R	45˚ VI DIMENSION			Item No (Round Type)	Item No (Square Type)
		A	B	C		
300	300	468	194	274	L45VI–30**R30	L45VI–30**
	600	681	282	399	L45VI–30**R60	L45VI–30**
600	300	468	194	274	L45VI–60**R30	L45VI–60**
	600	681	282	399	L45VI–60**R60	L45VI–60**
900	300	468	194	274	L45VI–90**R30	L45VI–90**
	600	681	282	399	L45VI–90**R60	L45VI–90**

L30VI - 30˚ Vertical Inside Bend (Elbow)

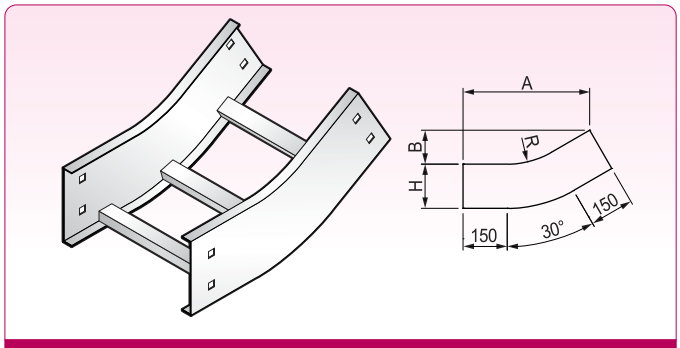

Round Type

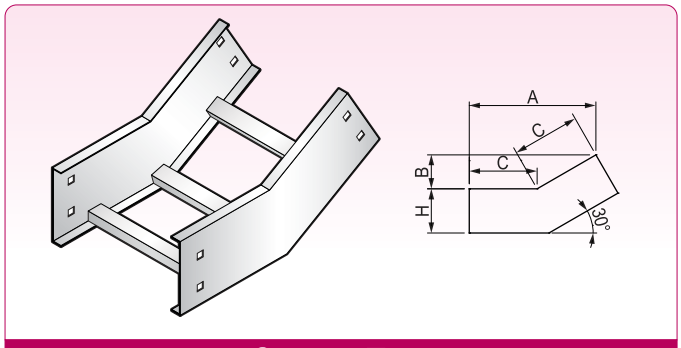

Square Type

W	R	30˚ VI DIMENSION			Item No (Round Type)	Item No (Square Type)
		A	B	C		
300	300	429	115	230	L30VI–30**R30	L30VI–30**
	600	580	156	311	L30VI–30**R60	L30VI–30**
600	300	429	115	230	L30VI–60**R30	L30VI–60**
	600	580	159	311	L30VI–60**R60	L30VI–60**
900	300	429	115	230	L30VI–90**R30	L30VI–90**
	600	580	156	311	L30VI–90**R60	L30VI–90**

LHT - Horizontal Tee Bend (Elbow)

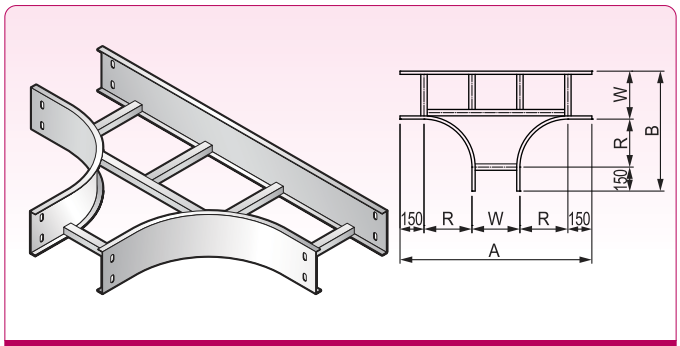

Round Type

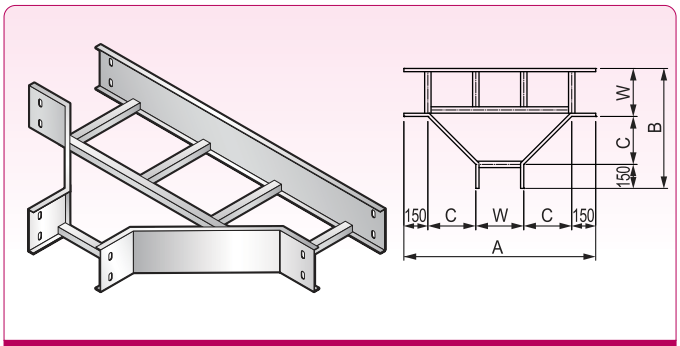

Square Type

W	R & C	Horizontal Tee DIMENSION		Item No (Round Type)	Item No (Square Type)
		A	B		
300	300	1200	750	LHT–30**R30	LHT–30**C30
	600	1800	1050	LHT–30**R60	LHT–30**C60
600	300	1500	1050	LHT–60**R30	LHT–60**C30
	600	2100	1350	LHT–60**R60	LHT–60**C60
900	300	1800	1350	LHT–90**R30	LHT–90**C30
	600	2400	1650	LHT–90**R60	LHT–90**C60

LHC - Horizontal Cross Bend (Elbow)

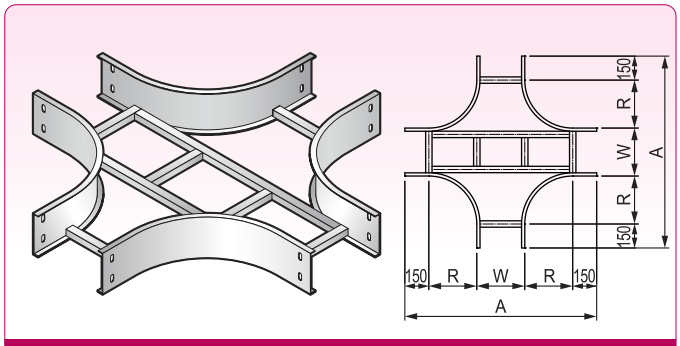

Round Type

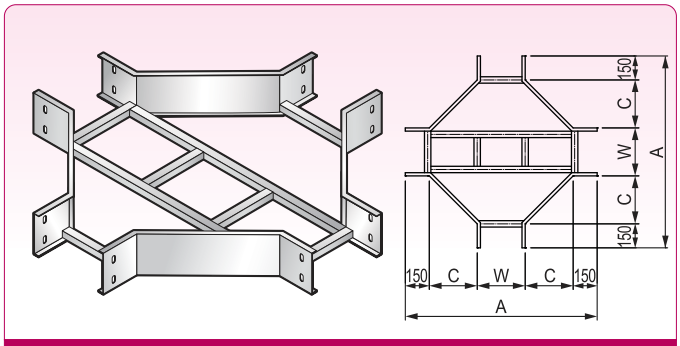

Square Type

W	R & C	Horizontal Cross DIMENSION	Item No (Round Type)	Item No (Square Type)
		A		
300	300	1200	LHC–30**R30	LHC–30**C30
	600	1800	LHC–30**R60	LHC–30**C60
600	300	1500	LHC–60**R30	LHC–60**C30
	600	2100	LHC–60**R60	LHC–60**C60
900	300	1800	LHC–90**R30	LHC–90**C30
	600	2400	LHC–90**R60	LHC–90**C60

LVT - Vertical Tee Bend (Elbow)

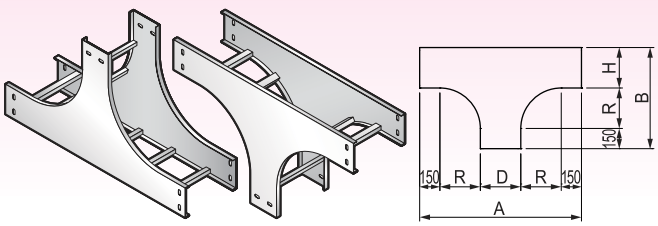

Round Type

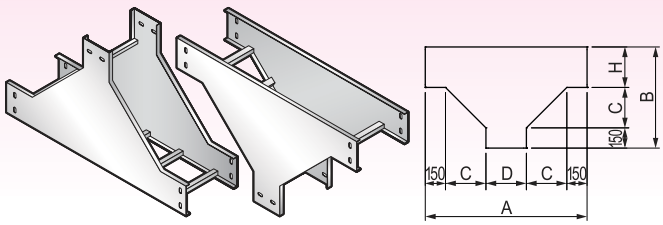

Square Type

W	R & C	Vertical Tee DIMENSION			Item No (Round Type)	Item No (Square Type)
		A	B	D & H		
300	300	1100	650	200	LVT–3020R30	LVT–3020C30
	600	1700	950	200	LVT–3020R60	LVT–3020C60
600	300	1100	650	200	LVT–6020R30	LVT–6020C30
	600	1700	950	200	LVT–6020R60	LVT–6020C60
900	300	1100	650	200	LVT–9020R30	LVT–9020C30
	600	1700	950	200	LVT–9020R60	LVT–9020C60

LSR, LLR, LRR - Reducer

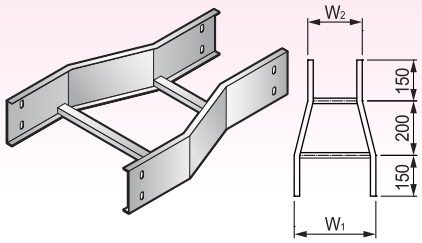

Straight

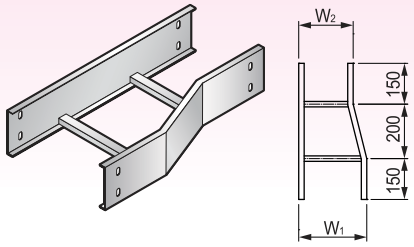

Left Hand

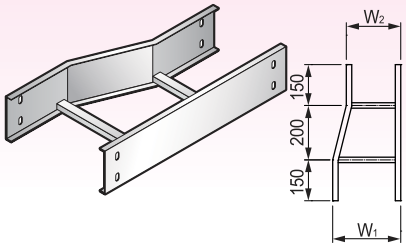

Right Hand

W_1	W_2	Item No (Straigt Hand)	Item No (Left Hand)	Item No (Right Hand)
300	200	LSR–3020**	LLR–3020**	LRR–3020**
600	300	LSR–6030**	LLR–6030**	LRR–6030**
	400	LSR–6040**	LLR–6040**	LRR–6040**
900	400	LSR–9040**	LLR–9040**	LRR–9040**
	600	LSR–9060**	LLR–9060**	LRR–9060**

Item Numbering

LJC - 10
- Item code (Ladder Joint Connector)
- Height

LSRC - 20 10 10
- Item code (Ladder Straight Reducing Joint Connector)
- Width1
- Width2
- Height

Joint Connector (Splice Plate)

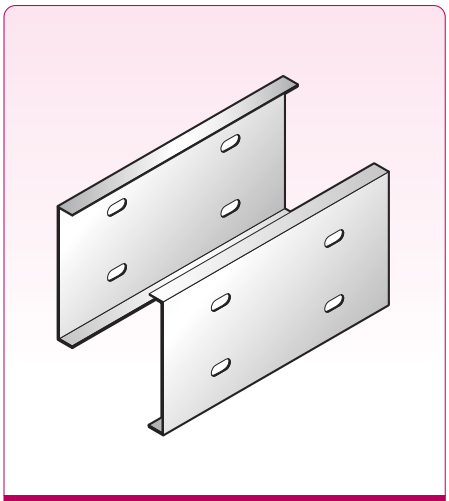

LJC (C-Type)

■ Ladder Joint Connector

Item No	Depth(H)
LJC–10	100
LJC–15	150
LJC–20	200

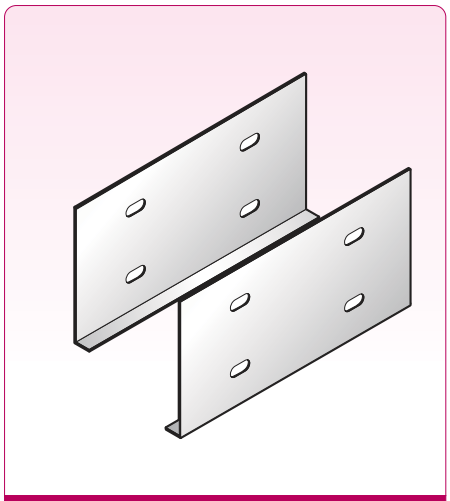

LJL (L-Type)

■ Ladder Joint Connector

Item No	Depth(H)
LJL–10	100
LJL–15	150
LJL–20	200

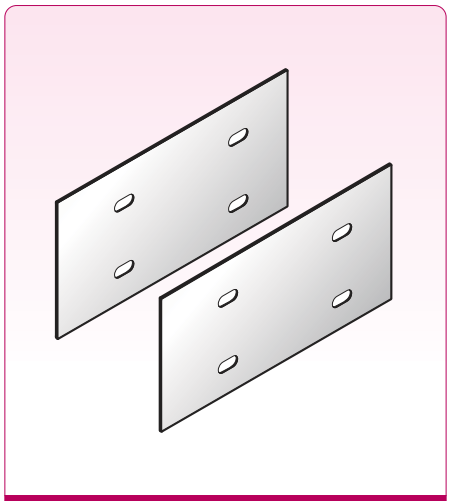

LJI (I-Type)

■ Ladder Joint Connector

Item No	Depth(H)
LJI–10	100
LJI–15	150
LJI–20	200

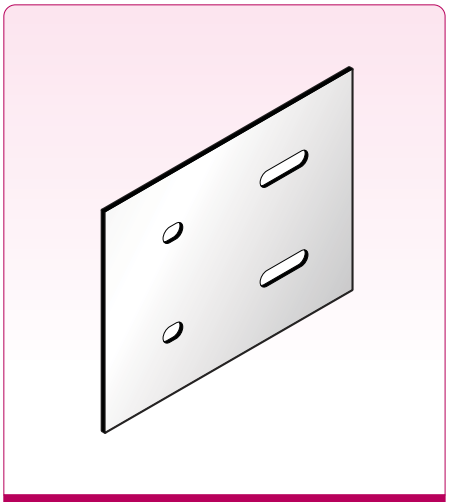

LEC

■ Ladder Expansion Joint Connector

Item No	Depth(H)
LEC–10	100
LEC–15	150
LEC–20	200

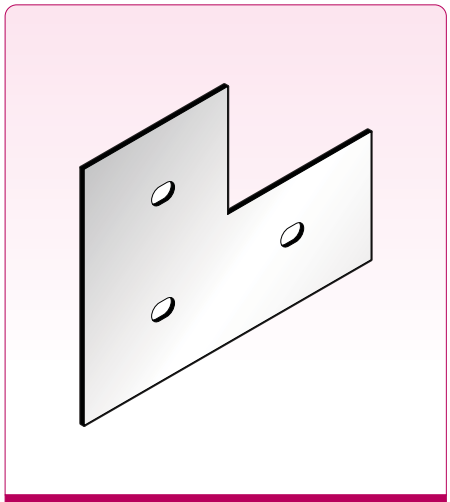

LVOC

■ Ladder Vertical Offset Joint Connector

Item No	Depth(H)
LVOC–15–10	150–100
LVOC–20–10	200–100
LVOC–20–15	200–150

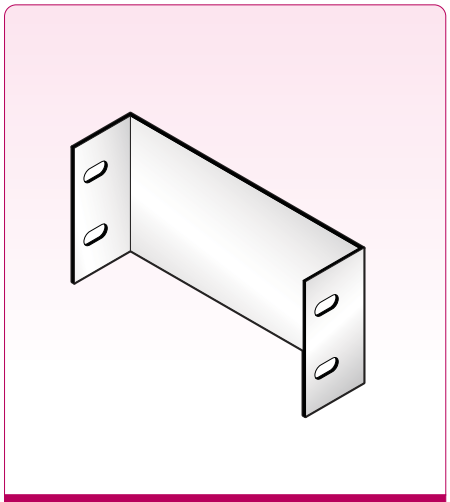

EP

■ End Plate

Item No	Depth(H)
EP–**10	100
EP–**15	150
EP–**20	200

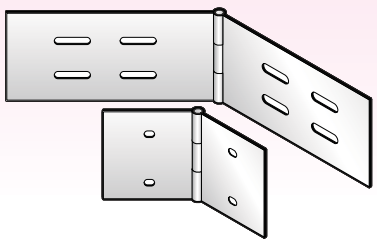

LAHC

■ Ladder Adjustable Horizontal Joint Connector

Item No	Depth(H)
LAHC–10	100
LAHC–15	150
LAHC–20	200

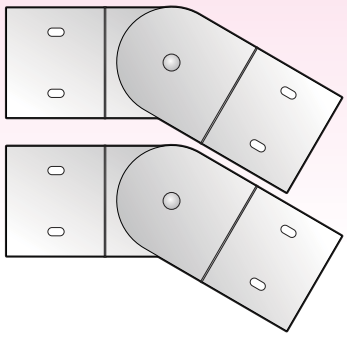

LAVC

■ Ladder Adjustable Vertical Joint Connector

Item No	Depth(H)
LAVC–10	100
LAVC–15	150
LAVC–20	200

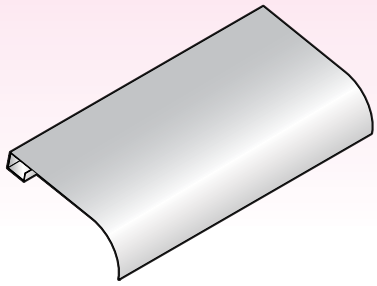

ED

■ End Drop Out

Item No	R	Width(W)
ED–30W20R	20	300
ED–60W20R		600
ED–90W20R		900

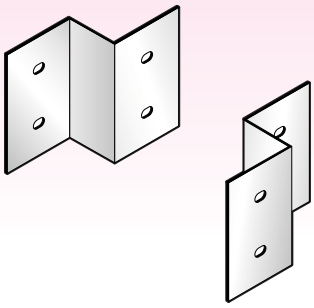

LSRC

■ Ladder Straight Reducing Joint Connector

Item No	Depth(H)
LSRC–10	100
LSRC–15	150
LSRC–20	200

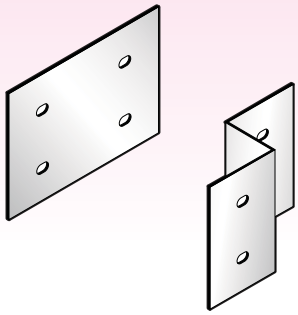

LLRC / LRRC

■ Ladder Left & Right Reducing Joint Connector

Item No	Depth(H)
LLRC(LRRC)–****10	100
LLRC(LRRC)–****15	150
LLRC(LRRC)–****20	200

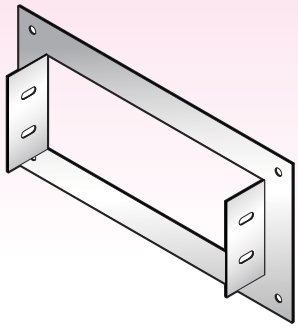

LBC

■ Ladder Box Connector

Item No	Depth(H)
LBC–**10	100
LBC–**15	150
LBC–**20	200

Hold Down Clamp

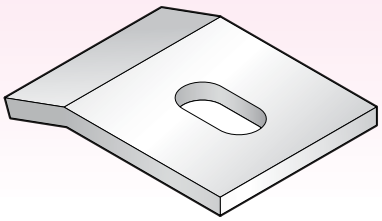

HDCS

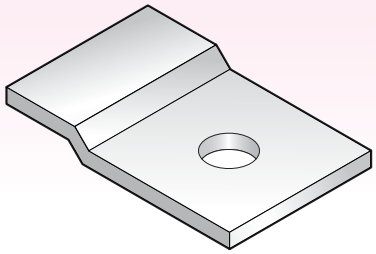

HDCE

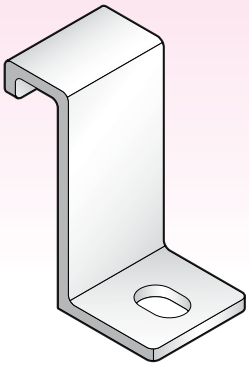

HDCH

TRAY FIXER (HOLD DOWN CLAMP)

HDCA

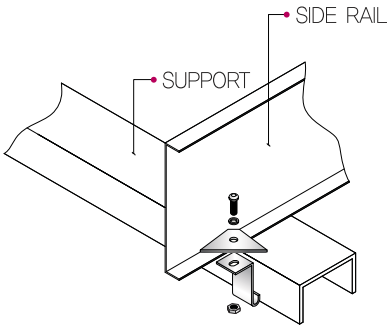

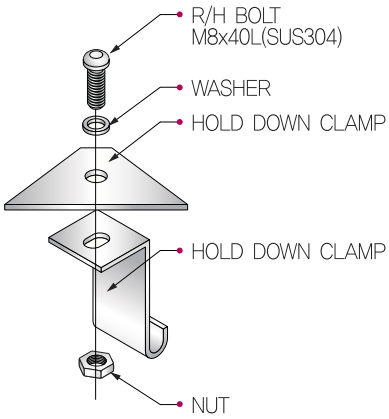

HDCB

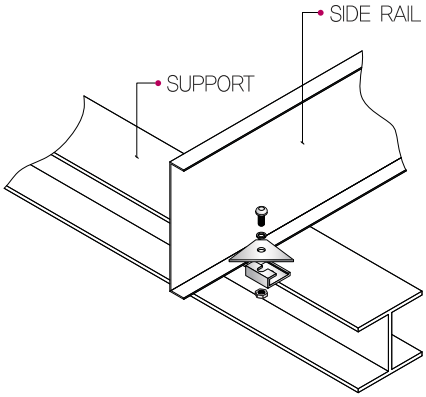

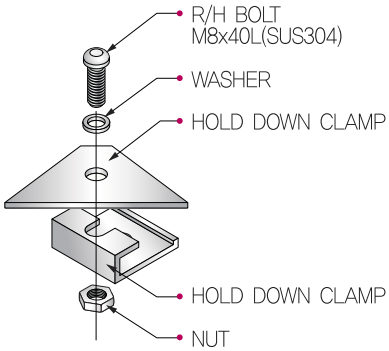

HDCH

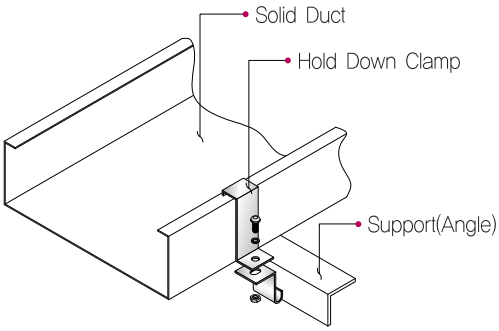

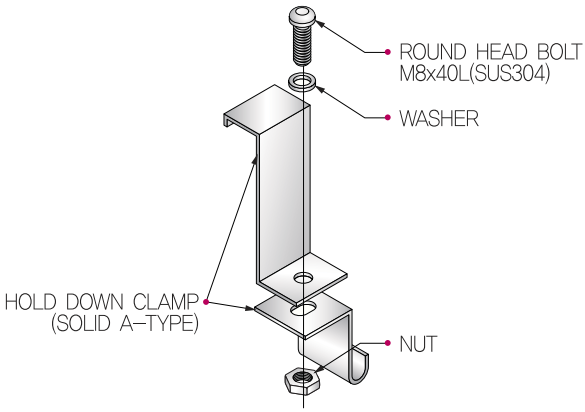

HDCC

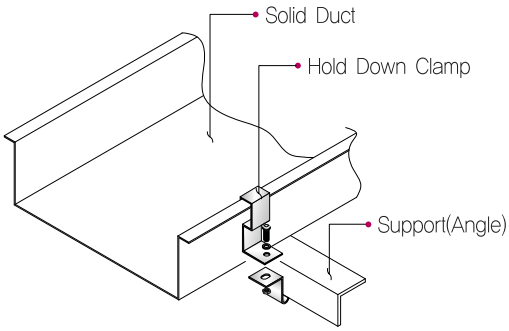

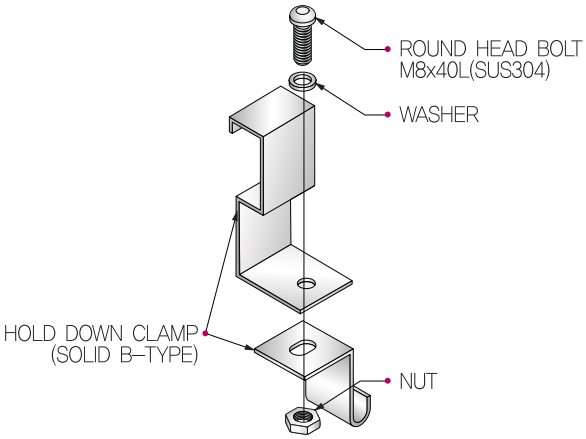

MEMO

3. Solid Bottom (duct)

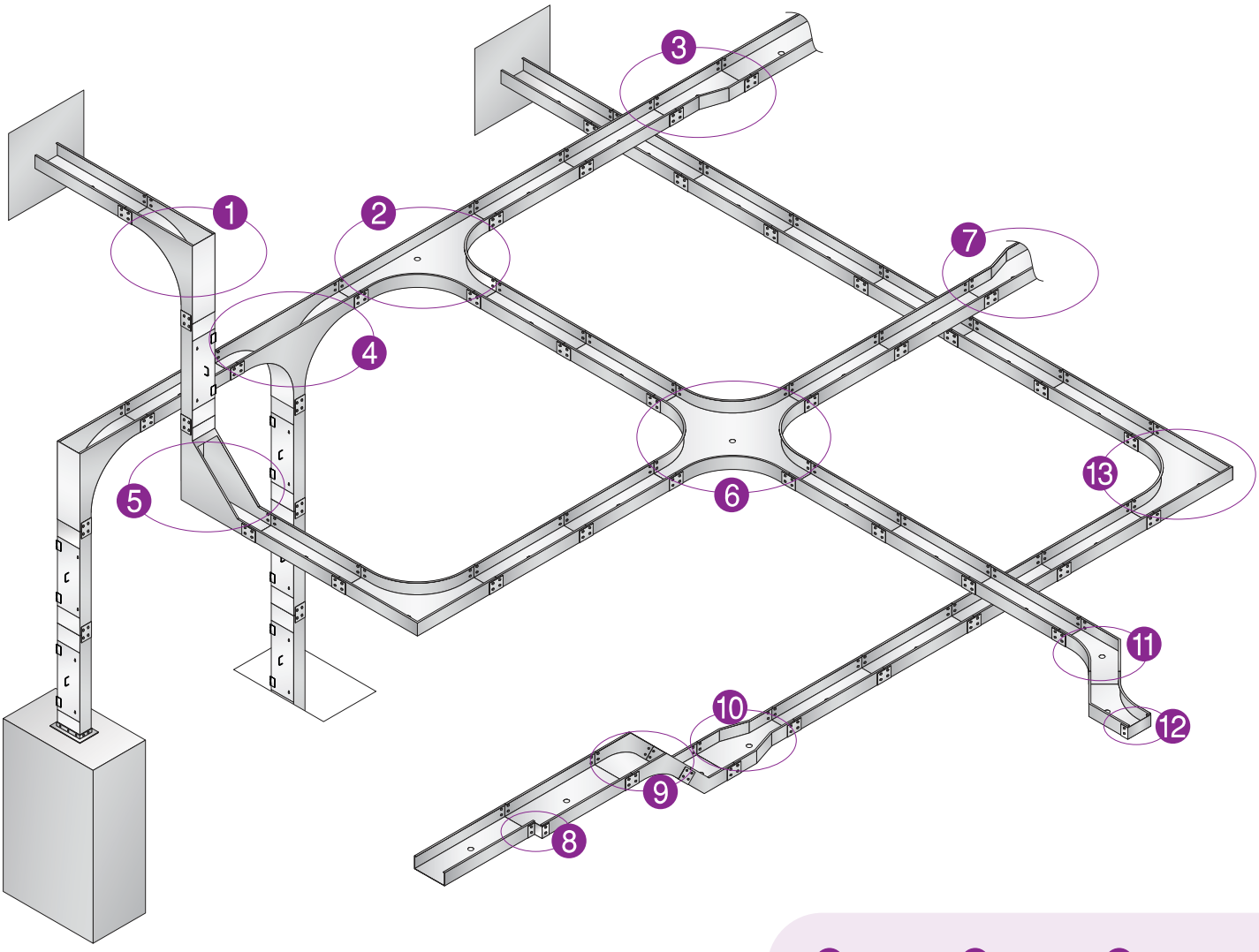

1 SVO
2 SHT
3 SRR
4 SVT
5 SVI
6 SHC
7 SLR
8 SRRC
9 SVO
10 SSR
11 SHB
12 EP
13 SHB

Specification Numbering

B A – C S

- **BA**
- **BB**
- **BC**
- **BD**

- **CS**-Carbon Steel
- **HGI**-Hot-dip Zinc-coated Steel
- **SUS**-Stainless Steel

Item Numbering

S 90 H B – 30 10 R 30

- **S** : Solid
- **ST** : Straight
- **90~30HB** : 90°~30° Horizontal bend
- **HT** : Horizontal tee
- **HC** : Horizontal cross
- **HO** : Horizontal offset
- **VT** : Vertical tee
- **90° ~30° VI** : 90°~30° Vertical inside
- **90° ~30° VO** : 90°~30° Vertical outside

- Width
- Height

- **R30** : Radius 300mm
- **R40** : Radius 400mm
- **R60** : Radius 600mm
- **C30** : Square 300mm
- **C40** : Square 400mm
- **C60** : Square 600mm
- **L24** : Length 2400mm
- **L30** : Length 3000mm
- **L60** : Length 6000mm

Solid Straight Tray

- Material : Carbon Steel
  Stainless Steel
  Hot–dip Zinc–coated Steel
- Fabrication : Electro ARC of CO2, TIG Welding or Argon Welding
- Finish : Hot Dip Galvanizing
  Acid Pickling after Fabrication
  Anodic Oxidation
  Paint
  Natural

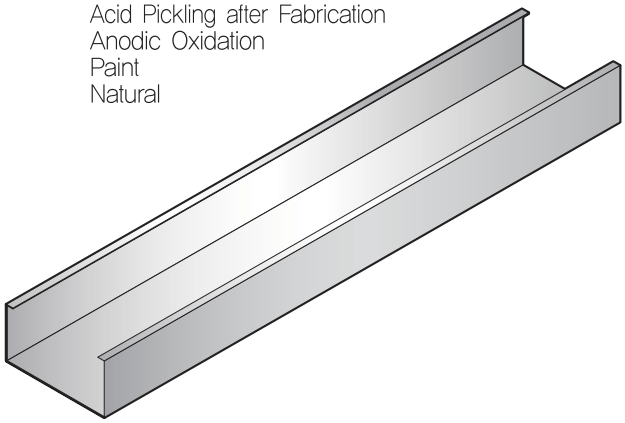

Solid Straight Tray (Aluminum)

- Material : Aluminium Alloy 6063s–T5 (KSD 6759)
- Finish : Anodic Oxidation
- Fabrication : Tapping Screw
- Standard Length : 3,000mm

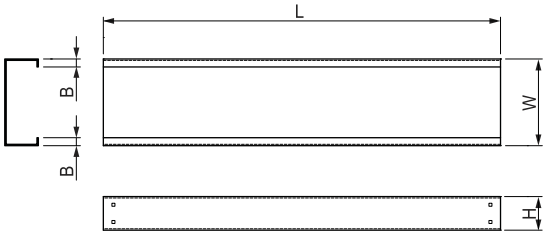

ST

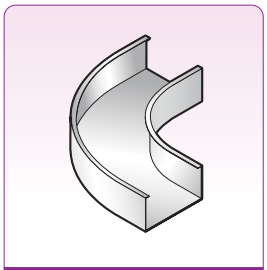
90HB

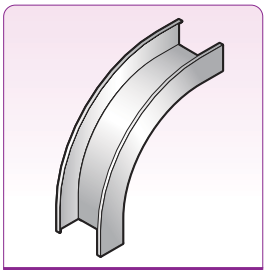
90VO

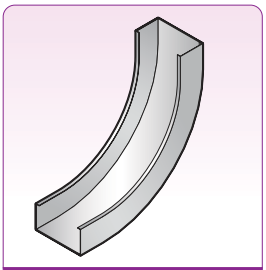
90VI

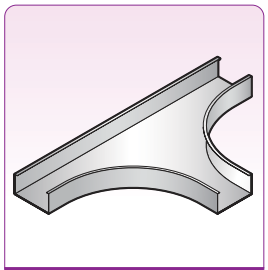
HT

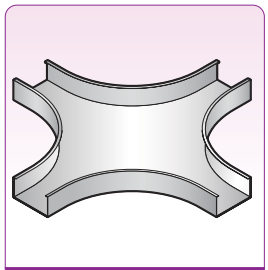
HC

■ BA–Strength for Straight Solid Bottom type

BA

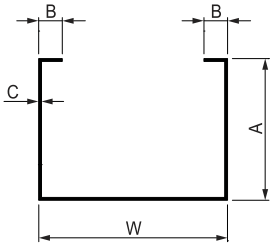

- A : Height
- B : Flange
- C : Thickness
- W : Width

Characteristic	Dimension				Item No.	Material	Strength for Bending Moment (kg/m) Support Span (cm)			Design Factors		
	W	A	B	C			240	300	370	Sx (cm)	Ix (cm^4)	Area (cm^2)
	300	100	20	2.0	SST–3010L30	CS	336	215	142	15.14	131.76	10.64
					SST–3010L30	SUS	294	188	124			
	300	100	20	2.3	SST–3010L30	CS	384	245	161	17.26	150.03	12.21
	600	100	20	2.0	SST–6010L30	CS	375	240	158	16.87	155.86	16.64
					SST–6010L30	SUS	328	210	138			
	600	100	20	2.3	SST–6010L30	CS	427	273	180	19.22	177.44	19.11
	900	100	20	2.0	SST–9010L30	CS	393	252	165	17.69	167.20	22.64
					SST–9010L30	SUS	344	220	145			
	900	100	20	2.3	SST–9010L30	CS	448	286	188	20.14	190.32	26.00
	300	150	20	2.0	SST–3015L30	CS	641	410	270	28.86	358.98	12.64
					SST–3015L30	SUS	561	359	236			
	300	150	20	2.3	SST–3015L30	CS	732	469	308	32.95	409.93	14.50
	600	150	20	2.0	SST–6015L30	CS	721	461	303	32.43	436.19	18.64
					SST–6015L30	SUS	631	404	265			
	600	150	20	2.3	SST–6015L30	CS	824	527	347	37.06	498.08	21.41
	900	150	20	2.0	SST–9015L30	CS	762	488	321	34.28	475.81	24.64
					SST–9015L30	SUS	667	427	280			
	900	150	20	2.3	SST–9015L30	CS	870	557	366	39.17	543.28	28.31
	300	150	20	2.0	SST–3020L30	CS	1027	657	432	46.20	736.45	14.64
					SST–3020L30	SUS	898	575	378			
	300	200	20	2.3	SST–3020L30	CS	1175	752	494	52.87	842.25	16.80
	600	200	20	2.0	SST–6020L30	CS	1159	742	488	52.14	909.90	20.64
					SST–6020L30	SUS	1014	649	427			
	600	200	20	2.3	SST–6020L30	CS	1326	849	558	59.67	1040.70	23.77
	900	200	20	2.0	SST–9020L30	CS	1232	788	518	55.44	1005.20	26.64
					SST–9020L30	SUS	1078	690	454			
	900	200	20	2.3	SST–9020L30	CS	1409	902	593	63.41	1149.60	30.61

■BB–Strength for Straight Solid Bottom type

Characteristic	Dimension				Item No.	Material	Strength for Bending Moment (kg/m) Support Span (cm)			Design Factors		
	W	A	B	C			240	300	370	Sx (cm)	Ix (cm⁴)	Area (cm²)
BB	300	100	20	2.0	SST–3010L30	CS	336	215	142	15.14	131.76	10.64
					SST–3010L30	SUS	294	188	124			
	300	100	20	2.3	SST–3010L30	CS	384	245	161	17.26	150.03	12.21
	600	100	20	2.0	SST–6010L30	CS	375	240	158	16.87	155.86	16.64
					SST–6010L30	SUS	328	210	138			
	600	100	20	2.3	SST–6010L30	CS	429	275	181	19.32	178.36	19.12
	900	100	20	2.0	SST–9010L30	CS	393	252	165	17.69	167.20	22.64
					SST–9010L30	SUS	344	220	145			
	900	100	20	2.3	SST–9010L30	CS	450	288	189	20.25	191.34	26.02
	300	150	20	2.0	SST–3015L30	CS	641	410	270	28.86	358.98	12.64
					SST–3015L30	SUS	561	359	236			
	300	150	20	2.3	SST–3015L30	CS	735	470	309	33.07	411.43	14.52
	600	150	20	2.0	SST–6015L30	CS	721	461	303	32.43	436.19	18.64
					SST–6015L30	SUS	631	404	265			
	600	150	20	2.3	SST–6015L30	CS	827	529	348	37.20	500.00	21.42
	900	150	20	2.0	SST–9015L30	CS	762	488	321	34.28	475.81	24.64
					SST–9015L30	SUS	667	427	280			
	900	150	20	2.3	SST–9015L30	CS	874	559	368	39.33	545.45	28.32

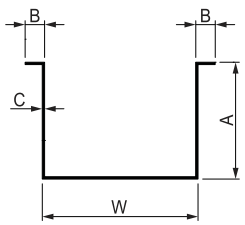

- A : Height
- B : Flange
- C : Thickness
- W : Width

■BC · BD–Strength for Straight Solid Bottom type

Characteristic	Dimension				Item No.	Material
	W	A	B	C		
BC	300	100	20	2.0	SST–3010L30	CS
					SST–3010L30	SUS
	300	100	20	2.3	SST–3010L30	CS
	600	100	20	2.0	SST–6010L30	CS
					SST–6010L30	SUS
	600	100	20	2.3	SST–6010L30	CS
	900	100	20	2.0	SST–9010L30	CS
					SST–9010L30	SUS
	900	100	20	2.3	SST–9010L30	CS
BD	300	100	20	2.0	SST–3010L30	CS
					SST–3010L30	SUS
	300	100	20	2.3	SST–3010L30	CS
	600	100	20	2.0	SST–6010L30	CS
					SST–6010L30	SUS
	600	100	20	2.3	SST–6010L30	CS
	900	100	20	2.0	SST–9010L30	CS
					SST–9010L30	SUS
	900	100	20	2.3	SST–9010L30	CS

BC

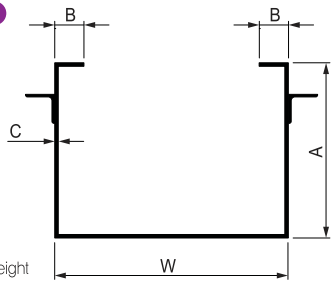

- A : Height
- B : Flange
- C : Thickness
- W : Width

BD

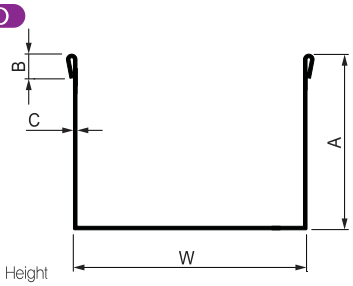

- A : Height
- B : Flange
- C : Thickness
- W : Width

S90HB - 90˚ Horizontal Bend (Elbow)

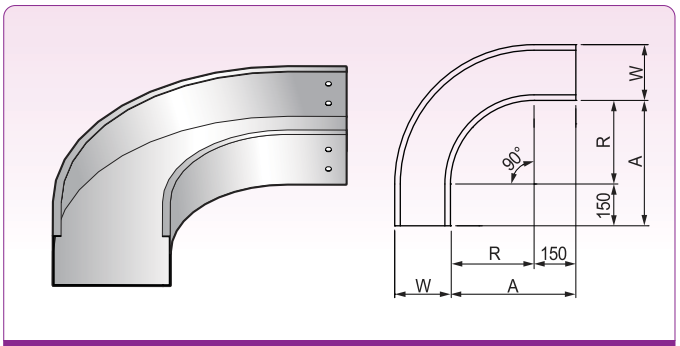

Round Type

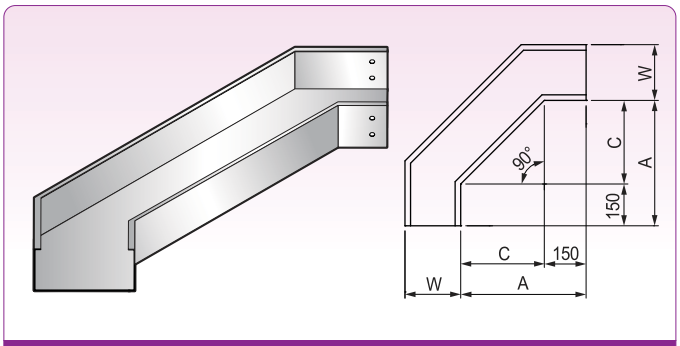

Square Type

W	R & C	90˚ HB DIMENSION A	Item No (Round Type)	Item No (Square Type)
300	300	450	S90HB–30**R30	S90HB–30**C30
	600	750	S90HB–30**R60	S90HB–30**C60
600	300	450	S90HB–60**R30	S90HB–60**C30
	600	750	S90HB–60**R60	S90HB–60**C60
900	300	450	S90HB–90**R30	S90HB–90**C30
	600	750	S90HB–90**R60	S90HB–90**C60

S60HB - 60˚ Horizontal Bend (Elbow)

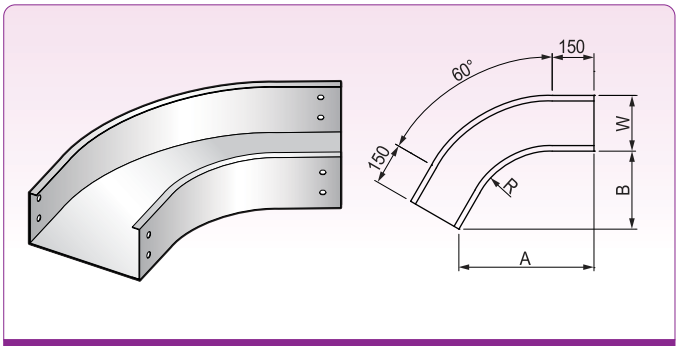

Round Type

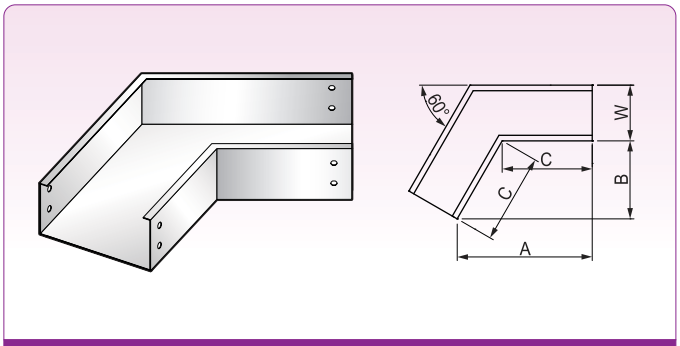

Square Type

W	R	60˚ HB DIMENSION A	B	C	Item No (Round Type)	Item No (Square Type)
300	300	485	280	323	S60HB–30**R30	S60HB–30**
	600	744	430	496	S60HB–30**R60	S60HB–30**
600	300	485	280	323	S60HB–60**R30	S60HB–60**
	600	744	430	496	S60HB–60**R60	S60HB–60**
900	300	485	280	323	S60HB–90**R30	S60HB–90**
	600	744	430	496	S60HB–90**R60	S60HB–90**

S45HB - 45˚ Horizontal Bend (Elbow)

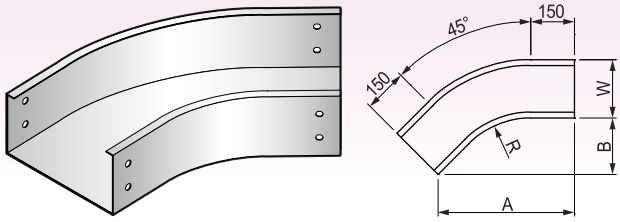

Round Type

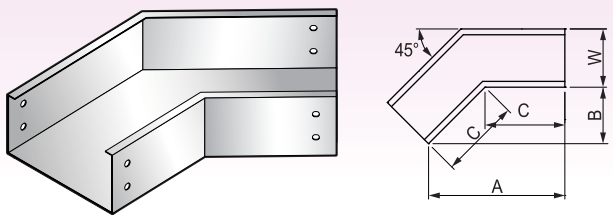

Square Type

W	R	45˚ HB DIMENSION			Item No (Round Type)	Item No (Square Type)
		A	B	C		
300	300	468	194	274	S45HB–30**R30	S45HB–30**
	600	680	282	399	S45HB–30**R60	S45HB–30**
600	300	468	194	274	S45HB–60**R30	S45HB–60**
	600	680	282	399	S45HB–60**R60	S45HB–60**
900	300	468	194	274	S45HB–90**R30	S45HB–90**
	600	680	282	399	S45HB–90**R60	S45HB–90**

S30HB - 30˚ Horizontal Bend (Elbow)

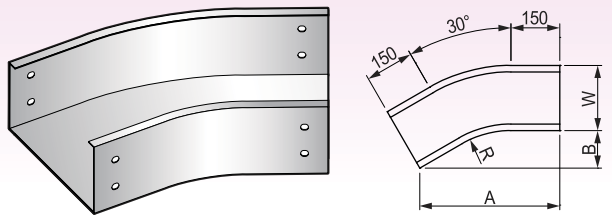

Round Type

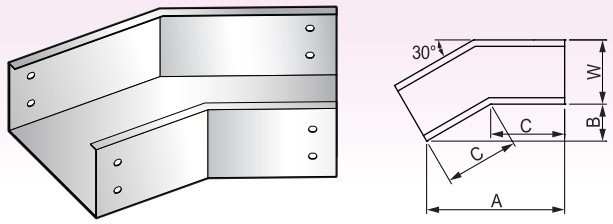

Square Type

W	R	30˚ HB DIMENSION			Item No (Round Type)	Item No (Square Type)
		A	B	C		
300	300	430	115	230	S30HB–30**R30	S30HB–30**
	600	580	155	311	S30HB–30**R60	S30HB–30**
600	300	430	115	230	S30HB–60**R30	S30HB–60**
	600	580	155	311	S30HB–60**R60	S30HB–60**
900	300	430	115	230	S30HB–90**R30	S30HB–90**
	600	580	155	311	S30HB–90**R60	S30HB–90**

S90VO - 90˚ Vertical Outside Bend (Elbow)

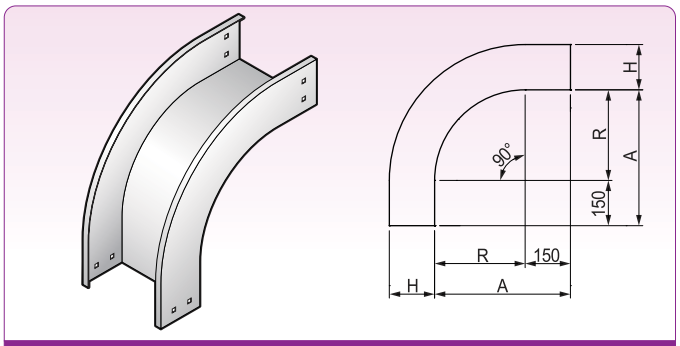

Round Type

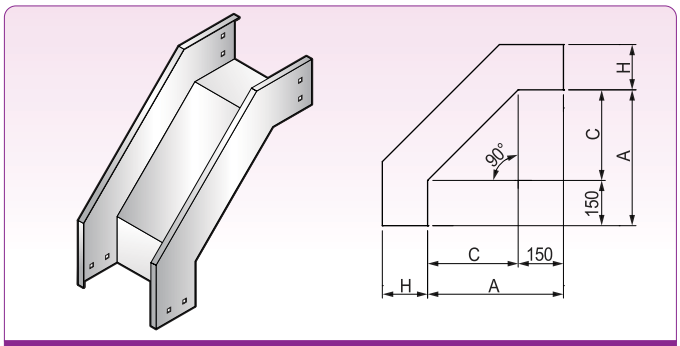

Square Type

W	R & C	90˚ VO DIMENSION A	Item No (Round Type)	Item No (Square Type)
300	300	450	S90VO–30**R30	S90VO–30**C30
	600	750	S90VO–30**R60	S90VO–30**C60
600	300	450	S90VO–60**R30	S90VO–60**C30
	600	750	S90VO–60**R60	S90VO–60**C60
900	300	450	S90VO–90**R30	S90VO–90**C30
	600	750	S90VO–90**R60	S90VO–90**C60

S60VO - 60˚ Vertical Outside Bend (Elbow)

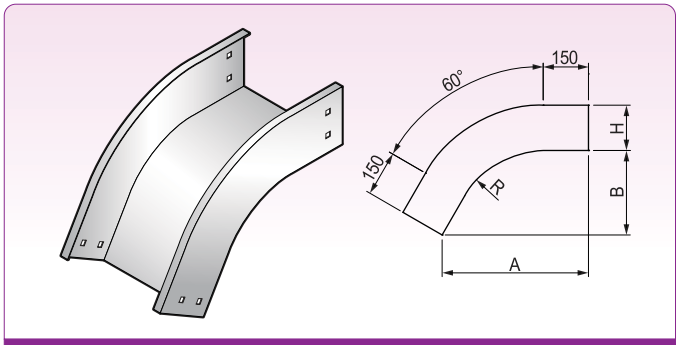

Round Type

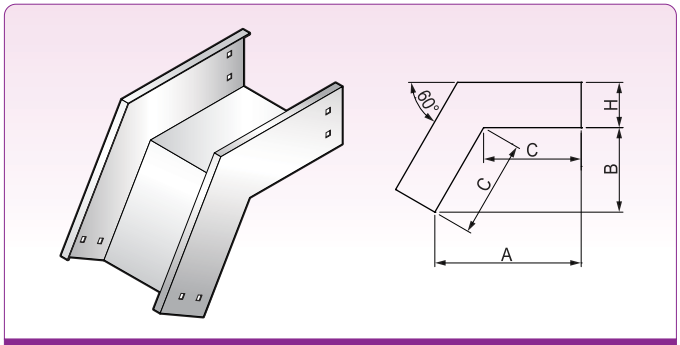

Square Type

W	R	60˚ VO DIMENSION A	B	C	Item No (Round Type)	Item No (Square Type)
300	300	485	280	323	S60VO–30**R30	S60VO–30**
	600	744	430	496	S60VO–30**R60	S60VO–30**
600	300	485	280	323	S60VO–60**R30	S60VO–60**
	600	744	430	496	S60VO–60**R60	S60VO–60**
900	300	485	280	323	S60VO–90**R30	S60VO–90**
	600	744	430	496	S60VO–90**R60	S60VO–90**

S45VO - 45˚ Vertical Outside Bend (Elbow)

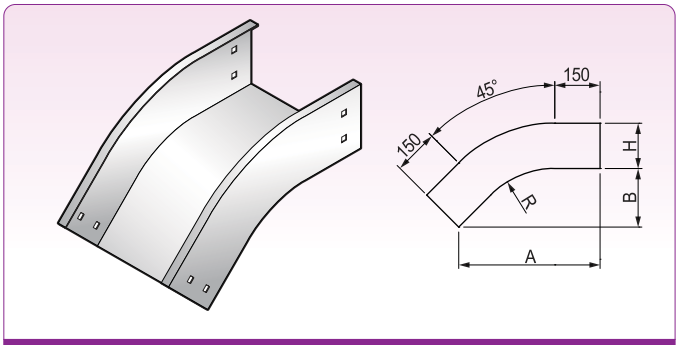

Round Type

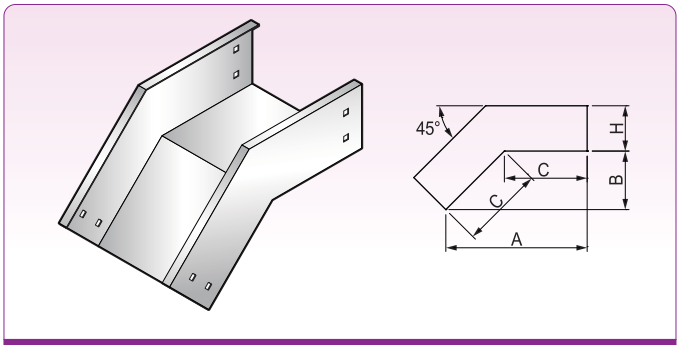

Square Type

W	R	45˚ VO DIMENSION			Item No (Round Type)	Item No (Square Type)
		A	B	C		
300	300	468	194	274	S45VO–30**R30	S45VO–30**
	600	681	282	399	S45VO–30**R60	S45VO–30**
600	300	468	194	274	S45VO–60**R30	S45VO–60**
	600	681	282	399	S45VO–60**R60	S45VO–60**
900	300	468	194	274	S45VO–90**R30	S45VO–90**
	600	681	282	399	S45VO–90**R60	S45VO–90**

S30VO - 30˚ Vertical Outside Bend (Elbow)

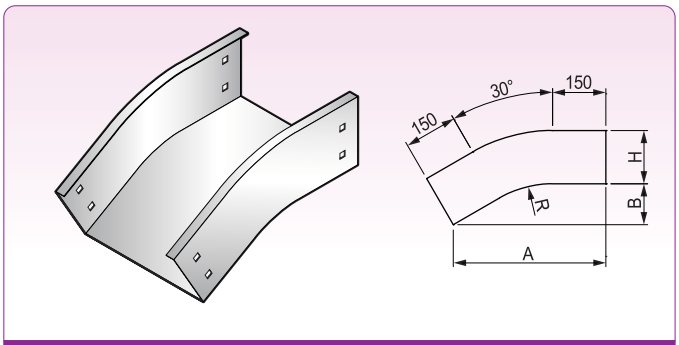

Round Type

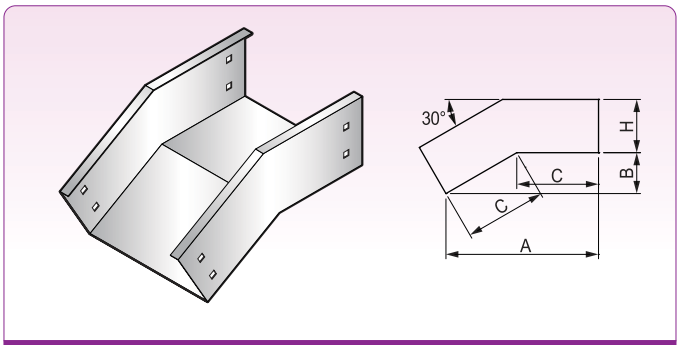

Square Type

W	R	30˚ VO DIMENSION			Item No (Round Type)	Item No (Square Type)
		A	B	C		
300	300	429	115	230	S30VO–30**R30	S30VO–30**
	600	580	156	311	S30VO–30**R60	S30VO–30**
600	300	429	115	230	S30VO–60**R30	S30VO–60**
	600	580	159	311	S30VO–60**R60	S30VO–60**
900	300	429	115	230	S30VO–90**R30	S30VO–90**
	600	580	156	311	S30VO–90**R60	S30VO–90**

S90VI - 90˚ Vertical Inside Bend (Elbow)

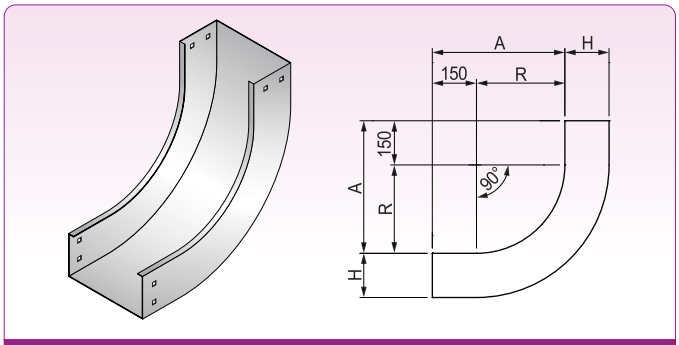

Round Type

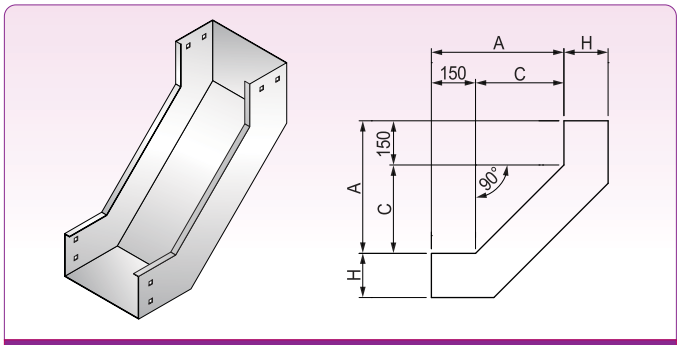

Square Type

W	R & C	90˚ VI DIMENSION A	Item No (Round Type)	Item No (Square Type)
300	300	450	S90VI–30**R30	S90VI–30**C30
	600	750	S90VI–30**R60	S90VI–30**C60
600	300	450	S90VI–60**R30	S90VI–60**C30
	600	750	S90VI–60**R60	S90VI–60**C60
900	300	450	S90VI–90**R30	S90VI–90**C30
	600	750	S90VI–90**R60	S90VI–90**C60

S60VI - 60˚ Vertical Inside Bend (Elbow)

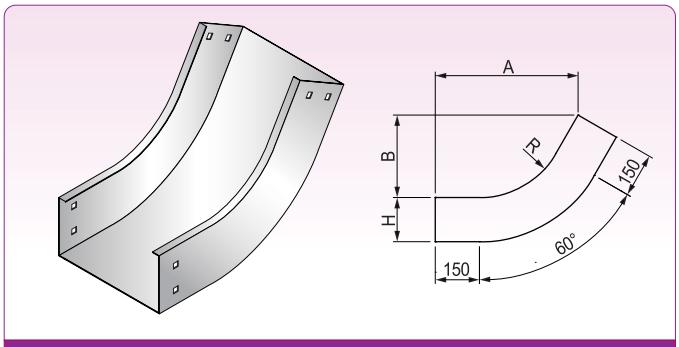

Round Type

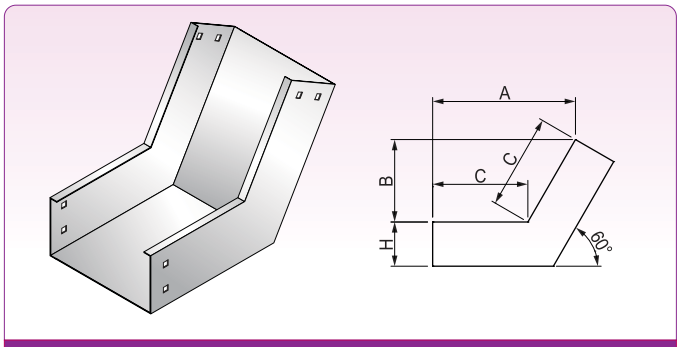

Square Type

W	R	60˚ VI DIMENSION A	B	C	Item No (Round Type)	Item No (Square Type)
300	300	485	280	323	S60VI–30**R30	S60VI–30**
	600	744	430	496	S60VI–30**R60	S60VI–30**
600	300	485	280	323	S60VI–60**R30	S60VI–60**
	600	744	430	496	S60VI–60**R60	S60VI–60**
900	300	485	280	323	S60VI–90**R30	S60VI–90**
	600	744	430	496	S60VI–90**R60	S60VI–90**

S45VI - 45˚ Vertical Inside Bend (Elbow)

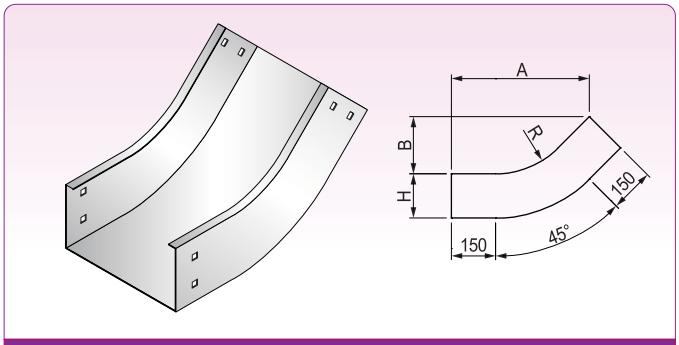

Round Type

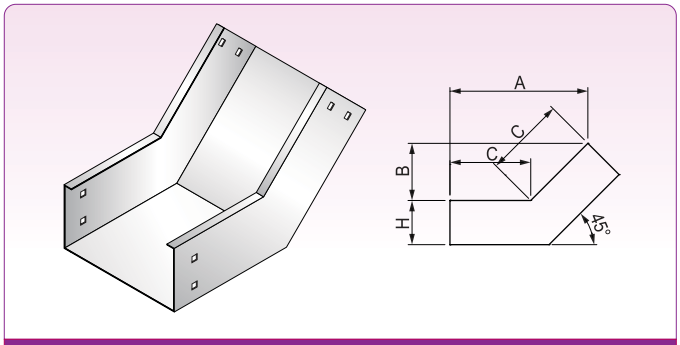

Square Type

W	R	45˚ VI DIMENSION			Item No (Round Type)	Item No (Square Type)
		A	B	C		
300	300	468	194	274	S45VI–30**R30	S45VI–30**
	600	681	282	399	S45VI–30**R60	S45VI–30**
600	300	468	194	274	S45VI–60**R30	S45VI–60**
	600	681	282	399	S45VI–60**R60	S45VI–60**
900	300	468	194	274	S45VI–90**R30	S45VI–90**
	600	681	282	399	S45VI–90**R60	S45VI–90**

S30VI - 30˚ Vertical Inside Bend (Elbow)

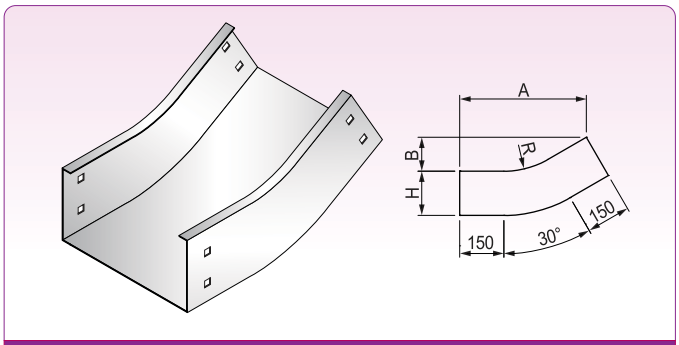

Round Type

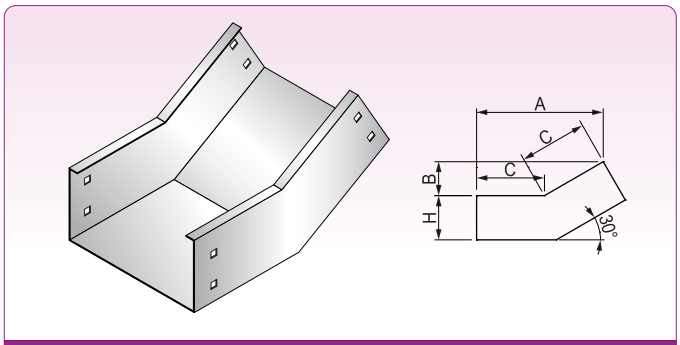

Square Type

W	R	30˚ VI DIMENSION			Item No (Round Type)	Item No (Square Type)
		A	B	C		
300	300	429	115	230	S30VI–30**R30	S30VI–30**
	600	580	156	311	S30VI–30**R60	S30VI–30**
600	300	429	115	230	S30VI–60**R30	S30VI–60**
	600	580	159	311	S30VI–60**R60	S30VI–60**
900	300	429	115	230	S30VI–90**R30	S30VI–90**
	600	580	156	311	S30VI–90**R60	S30VI–90**

SHT - Horizontal Tee Bend (Elbow)

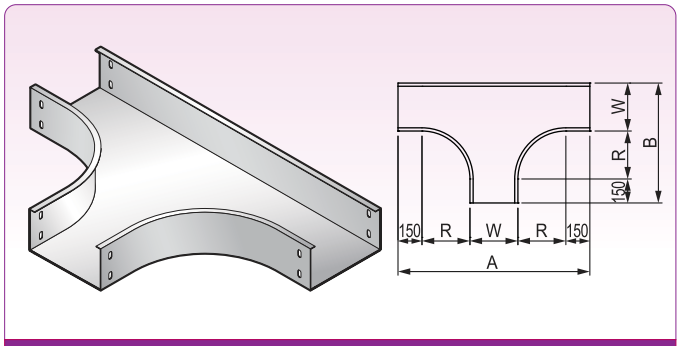

Round Type

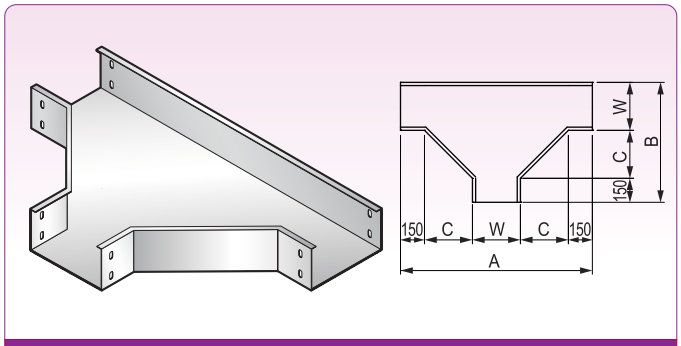

Square Type

W	R & C	Horizontal Tee DIMENSION		Item No (Round Type)	Item No (Square Type)
		A	B		
300	300	1200	750	SHT–30**R30	SHT–30**C30
	600	1800	1050	SHT–30**R60	SHT–30**C60
600	300	1500	1050	SHT–60**R30	SHT–60**C30
	600	2100	1350	SHT–60**R60	SHT–60**C60
900	300	1800	1350	SHT–90**R30	SHT–90**C30
	600	2400	1650	SHT–90**R60	SHT–90**C60

SHC - Horizontal Cross Bend (Elbow)

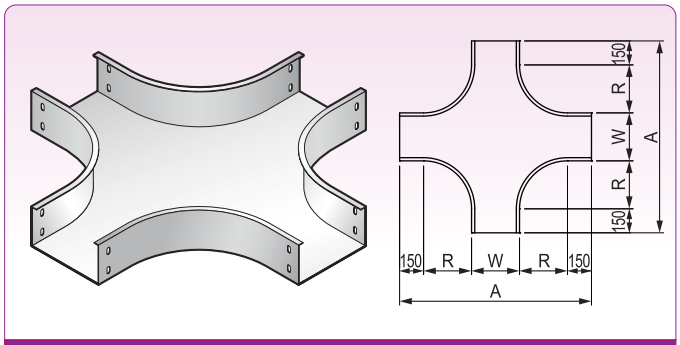

Round Type

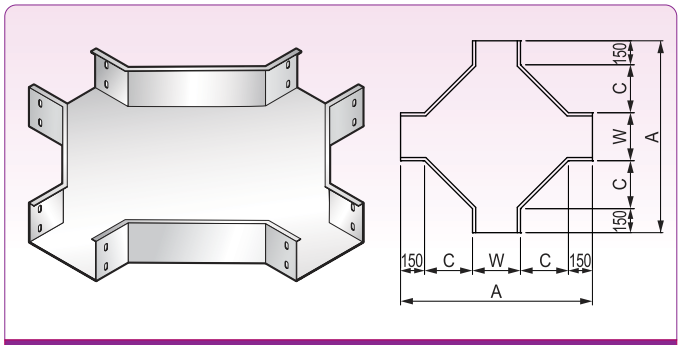

Square Type

W	R & C	Horizontal Cross DIMENSION	Item No (Round Type)	Item No (Square Type)
		A		
300	300	1200	SHC–30**R30	SHC–30**C30
	600	1800	SHC–30**R60	SHC–30**C60
600	300	1500	SHC–60**R30	SHC–60**C30
	600	2100	SHC–60**R60	SHC–60**C60
900	300	1800	SHC–90**R30	SHC–90**C30
	600	2400	SHC–90**R60	SHC–90**C60

SVT - Vertical Tee Bend (Elbow)

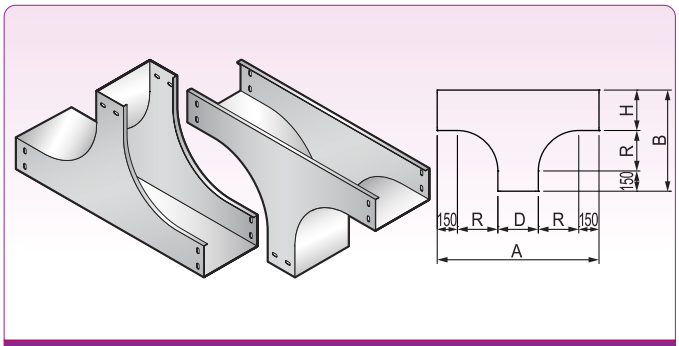

Round Type

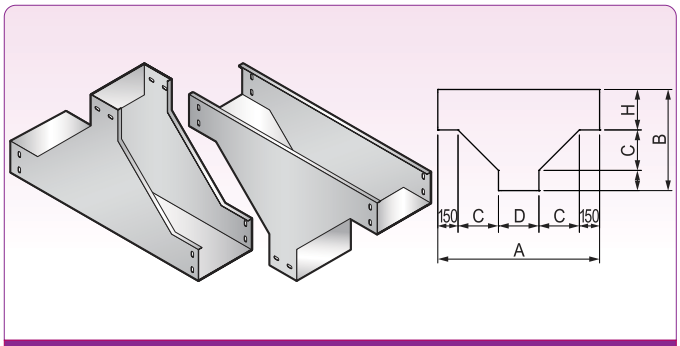

Square Type

W	R & C	Vertical Tee DIMENSION			Item No (Round Type)	Item No (Square Type)
		A	B	D & H		
300	300	1100	650	200	SVT–3020R30	SVT–3020C30
	600	1700	950	200	SVT–3020R60	SVT–3020C60
600	300	1100	650	200	SVT–6020R30	SVT–6020C30
	600	1700	950	200	SVT–6020R60	SVT–6020C60
900	300	1100	650	200	SVT–9020R30	SVT–9020C30
	600	1700	950	200	SVT–9020R60	SVT–9020C60

SSR, SLR, SRR - Reducer

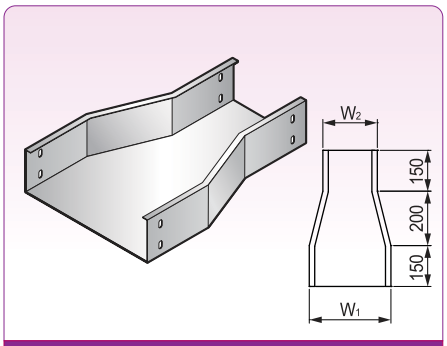

Straight

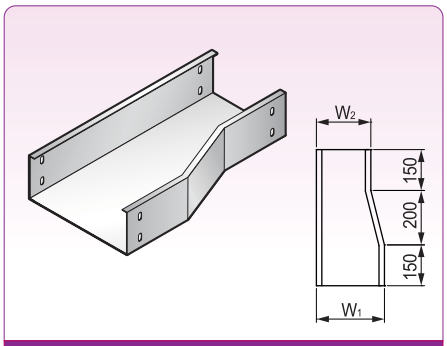

Left Hand

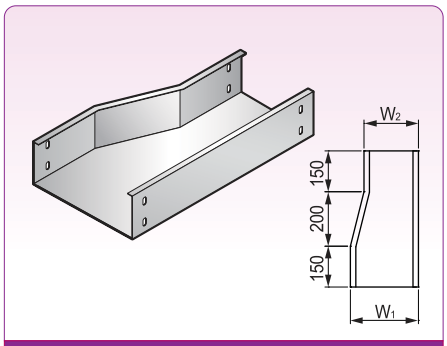

Right Hand

W_1	W_2	Item No (Straigt Hand)	Item No (Left Hand)	Item No (Right Hand)
300	200	SSR–3020**	SLR–3020**	SRR–3020**
600	300	SSR–6030**	SLR–6030**	SRR–6030**
	400	SSR–6040**	SLR–6040**	SRR–6040**
900	400	SSR–9040**	SLR–9040**	SRR–9040**
	600	SSR–9060**	SLR–9060**	SRR–9060**

Item Numbering

SJC – 30 10

- Item code (Solid Joint Connector)
- Width
- Height

SLRC - 30 10 10

- Item code (Solid Left Reducing Joint Connector)
- Width 1
- Width 2
- Height

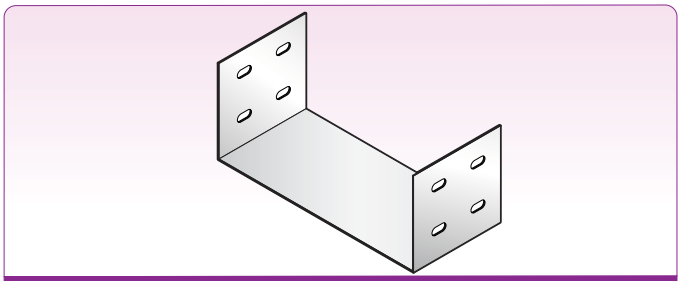

SJC

■ Solid Bottom Joint Connector

Item No	Depth(H)
SJC–**10	100
SJC–**15	150
SJC–**20	200

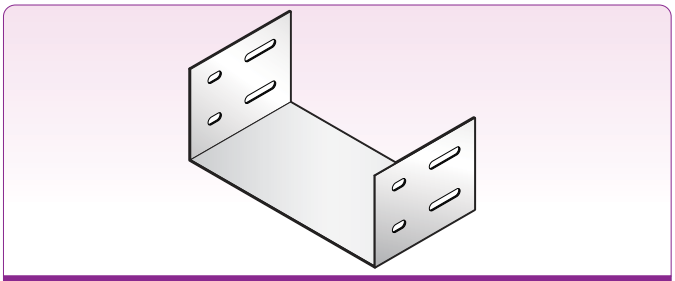

SEC

■ Solid Bottom Expension Joint Connector

Item No	Depth(H)
SEC–**10	100
SEC–**15	150
SEC–**20	200

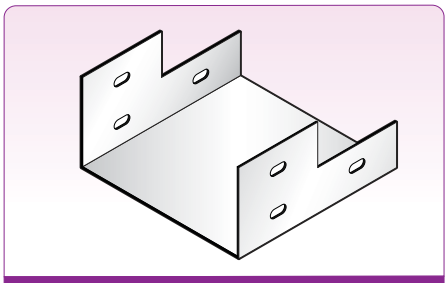

SVOC

■ Solid Vertical Offset Joint Connector

Item No	Depth(H)
SVOC–**15–10	150–100
SVOC–**20–10	200–100
SVOC–**20–15	200–150

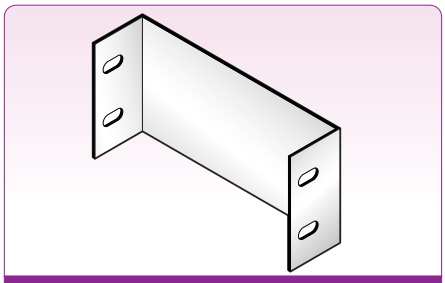

EP

■ End Plate

Item No	Depth(H)
EP–**10	100
EP–**15	150
EP–**20	200

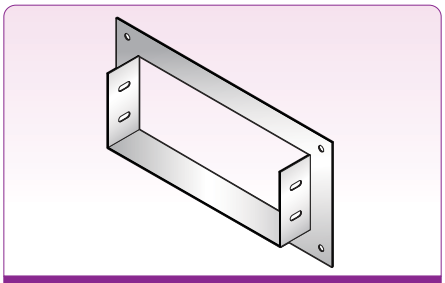

SBC

■ Solid Bottom Box Connector

Item No	Depth(H)
SBC–**10	100
SBC–**15	150
SBC–**20	200

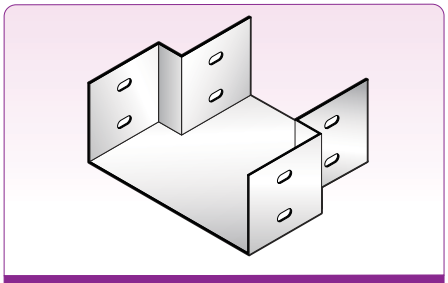

SSRC

■ Solid Straight Reducing Joint Connector

Item No	Depth(H)
SSRC–****10	100
SSRC–****15	150
SSRC–****20	200

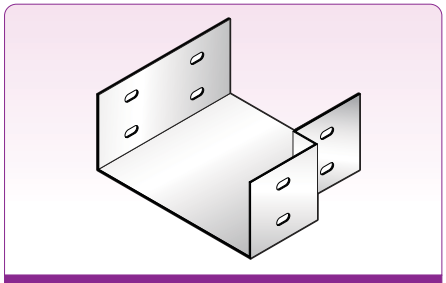

SLRC

■ Solid Left Reducing Joint Connector

Item No	Depth(H)
SLRC–****10	100
SLRC–****15	150
SLRC–****20	200

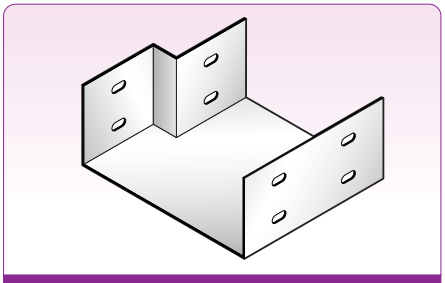

SRRC

■ Solid Right Reducing Joint Connector

Item No	Depth(H)
SRRC–****10	100
SRRC–****15	150
SRRC–****20	200

MEMO

4. PERFORATED

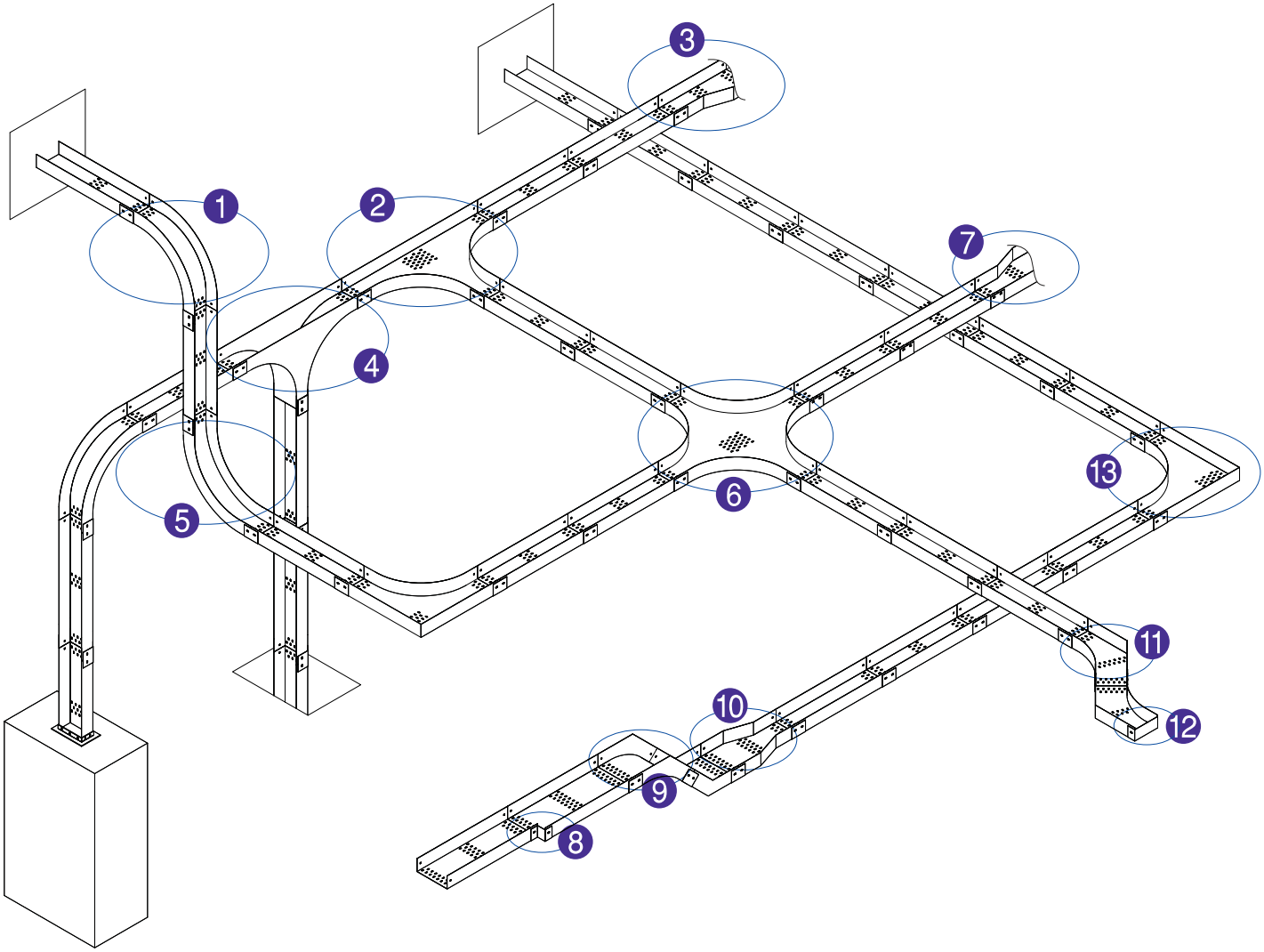

1 PVO
2 PHT
3 PRR
4 PVT
5 PVI
6 PHC
7 PLR
8 PRRC
9 PVO
10 PSR
11 PHB
12 EP
13 PHB

Specification Numbering

H H – C S

- **HD**
- **HH**
- **HU**

- **CS**-Carbon Steel
- **HGI**-Hot-dip Zinc-coated Steel
- **SUS**-Stainless Steel

Item Numbering

P 90 H B – 30 5 R 30

- **P** : Perforated
- **ST** : Straight
- **90~30HB** : 90°~30° Horizontal bend
- **HT** : Horizontal tee
- **HC** : Horizontal cross
- **HO** : Horizontal offset
- **VT** : Vertical tee
- **90° ~30° VI** : 90°~30° Vertical inside
- **90° ~30° VO** : 90°~30° Vertical outside
- Width
- Height
- **R30** : Radius 300mm
- **R40** : Radius 400mm
- **R60** : Radius 600mm
- **C30** : Square 300mm
- **C40** : Square 400mm
- **C60** : Square 600mm
- **L24** : Length 2400mm
- **L30** : Length 3000mm
- **L60** : Length 6000mm

Ladder Straight Tray

- Material : Carbon Steel
  Stainless Steel
  Hot–dip Zinc–coated Steel
- Fabrication : Electro ARC of CO2, TIG Welding or Argon Welding
- Finish : Hot Dip Galvanizing
  Acid Pickling after Fabrication
  Anodic Oxidation
  Paint
  Natural

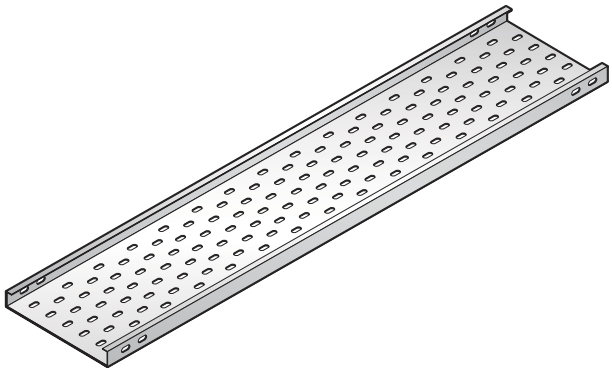

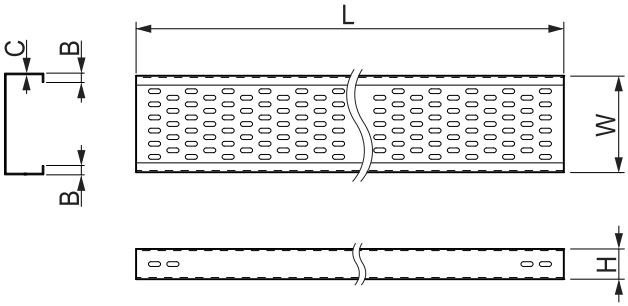

ST

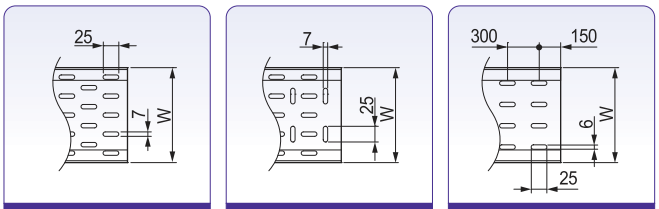

PA | PB | PC

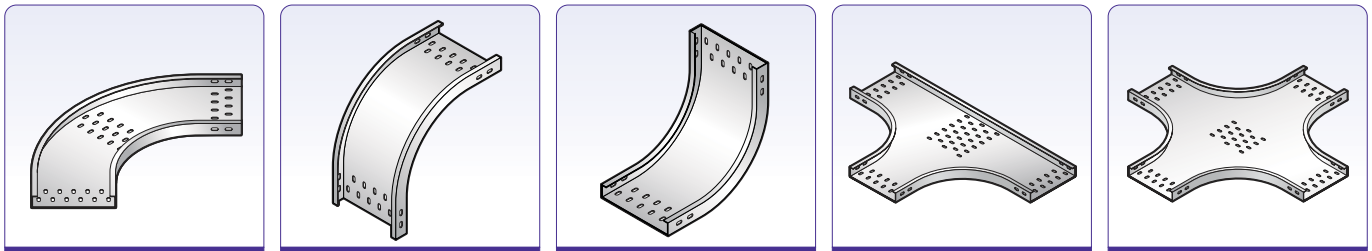

90HB | 90VO | 90VI | HT | HC

■HD–Strength for Straight Solid Bottom type

HD

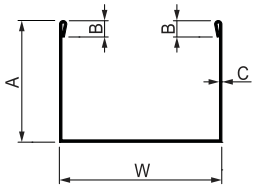

- A : Height
- B : Flange
- C : Thickness
- W : Width

50	50	13	1.6	PST–55L30	CS	137	53	34	140.7	21.7	8.7	2.40	8.84	2.77
75	50	13	1.6	PST–7.55L30	CS	148	58	37	164.0	25.0	10.3	2.61	10.31	3.17
100	50	13	1.6	PST–105L30	CS	158	62	40	182.7	28.0	11.3	2.78	11.45	3.57
150	50	13	1.6	PST–155L30	CS	172	67	43	208.7	31.7	13.0	3.02	13.11	4.37
200	50	13	1.6	PST–205L30	CS	181	71	45	226.7	34.6	14.3	3.19	14.24	5.17

■HH–Strength for Straight Solid Bottom type

HH

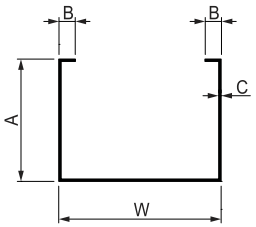

- A : Height
- B : Flange
- C : Thickness
- W : Width

50	50	13	1.6	PST–55L30	CS	137	53	34	140.7	21.7	8.7	2.40	8.84	2.77
75	50	13	1.6	PST–7.55L30	CS	148	58	37	164.0	25.0	10.3	2.61	10.31	3.17
100	50	13	1.6	PST–105L30	CS	158	62	40	182.7	28.0	11.3	2.78	11.45	3.57
150	50	13	1.6	PST–155L30	CS	172	67	43	208.7	31.7	13.0	3.02	13.11	4.37
200	50	13	1.6	PST–205L30	CS	181	71	45	226.7	34.6	14.3	3.19	14.24	5.17

■HU–Strength for Straight Solid Bottom type

HU

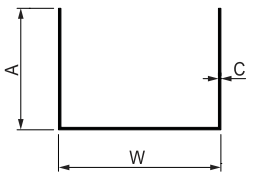

- A : Height
- C : Thickness
- W : Width

50	50	1.6	PST–55L30	CS	137	53	34	140.7	21.7	8.7	2.40	8.84	2.77
75	50	1.6	PST–7.55L30	CS	148	58	37	164.0	25.0	10.3	2.61	10.31	3.17
100	50	1.6	PST–105L30	CS	158	62	40	182.7	28.0	11.3	2.78	11.45	3.57
150	50	1.6	PST–155L30	CS	172	67	43	208.7	31.7	13.0	3.02	13.11	4.37
200	50	1.6	PST–205L30	CS	181	71	45	226.7	34.6	14.3	3.19	14.24	5.17

P90HB - 90˚ Horizontal Bend (Elbow)

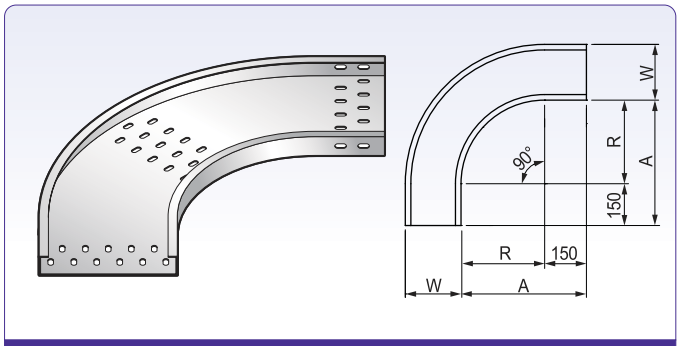

Round Type

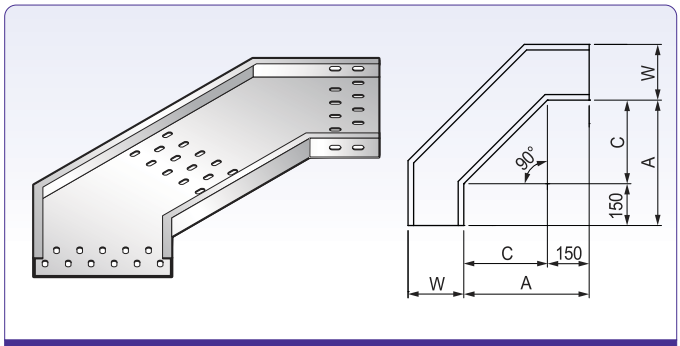

Square Type

W	R & C	90˚ HB DIMENSION A	Item No (Round Type)	Item No (Square Type)
300	300	450	P90HB–30**R30	P90HB–30**C30
	600	750	P90HB–30**R60	P90HB–30**C60
600	300	450	P90HB–60**R30	P90HB–60**C30
	600	750	P90HB–60**R60	P90HB–60**C60
900	300	450	P90HB–90**R30	P90HB–90**C30
	600	750	P90HB–90**R60	P90HB–90**C60

P60HB - 60˚ Horizontal Bend (Elbow)

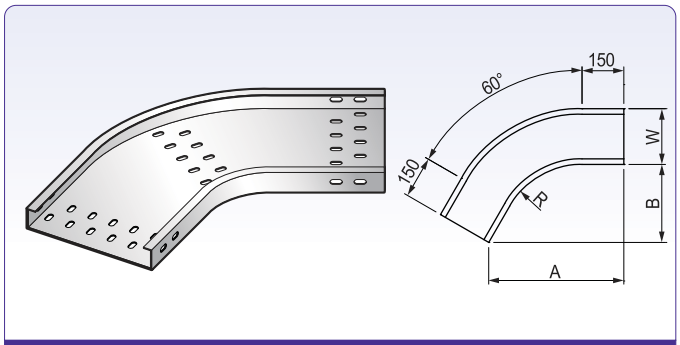

Round Type

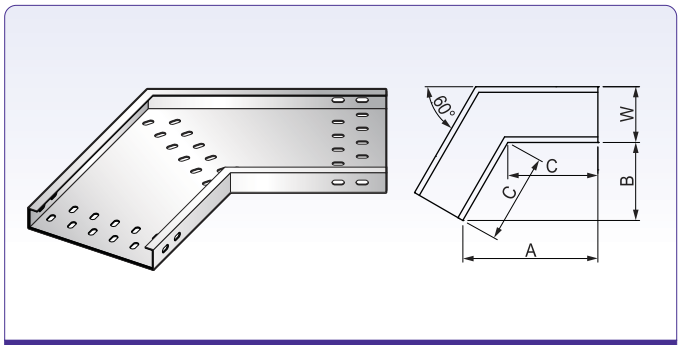

Square Type

W	R	60˚ HB DIMENSION A	B	C	Item No (Round Type)	Item No (Square Type)
300	300	485	280	323	P60HB–30**R30	P60HB–30**
	600	744	430	496	P60HB–30**R60	P60HB–30**
600	300	485	280	323	P60HB–60**R30	P60HB–60**
	600	744	430	496	P60HB–60**R60	P60HB–60**
900	300	485	280	323	P60HB–90**R30	P60HB–90**
	600	744	430	496	P60HB–90**R60	P60HB–90**

P45HB - 45˚ Horizontal Bend (Elbow)

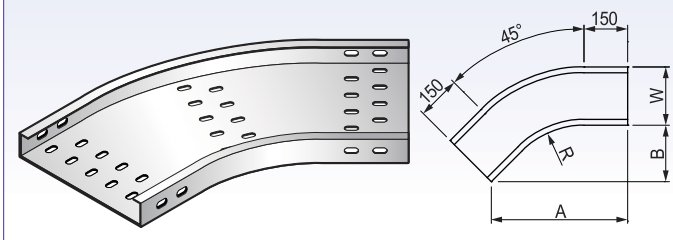

Round Type

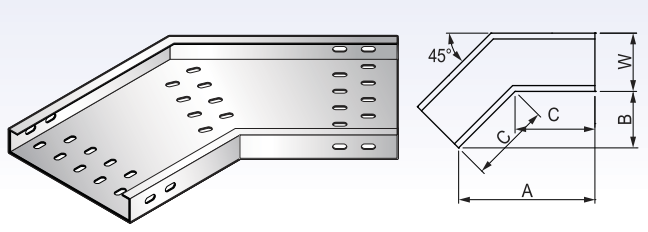

Square Type

W	R	45˚ HB DIMENSION			Item No (Round Type)	Item No (Square Type)
		A	B	C		
300	300	468	194	274	P45HB–30**R30	P45HB–30**
	600	680	282	399	P45HB–30**R60	P45HB–30**
600	300	468	194	274	P45HB–60**R30	P45HB–60**
	600	680	282	399	P45HB–60**R60	P45HB–60**
900	300	468	194	274	P45HB–90**R30	P45HB–90**
	600	680	282	399	P45HB–90**R60	P45HB–90**

P30HB - 30˚ Horizontal Bend (Elbow)

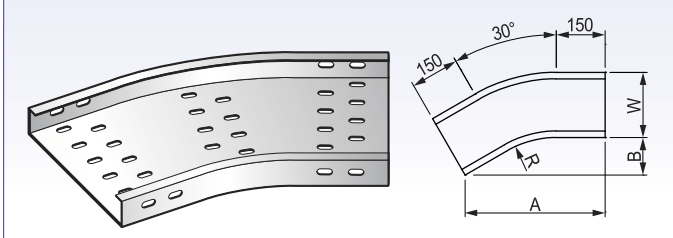

Round Type

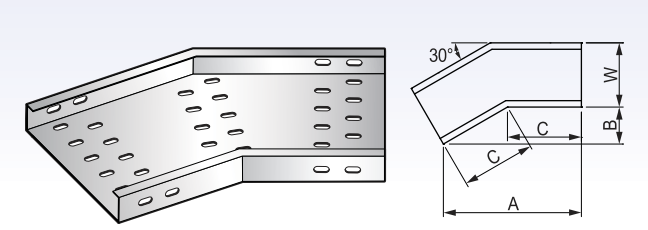

Square Type

W	R	30˚ HB DIMENSION			Item No (Round Type)	Item No (Square Type)
		A	B	C		
300	300	430	115	230	P30HB–30**R30	P30HB–30**
	600	580	155	311	P30HB–30**R60	P30HB–30**
600	300	430	115	230	P30HB–60**R30	P30HB–60**
	600	580	155	311	P30HB–60**R60	P30HB–60**
900	300	430	115	230	P30HB–90**R30	P30HB–90**
	600	580	155	311	P30HB–90**R60	P30HB–90**

P90VO - 90˚ Vertical Outside Bend (Elbow)

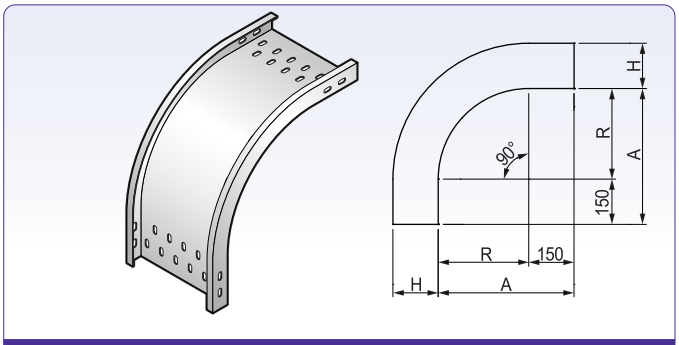

Round Type

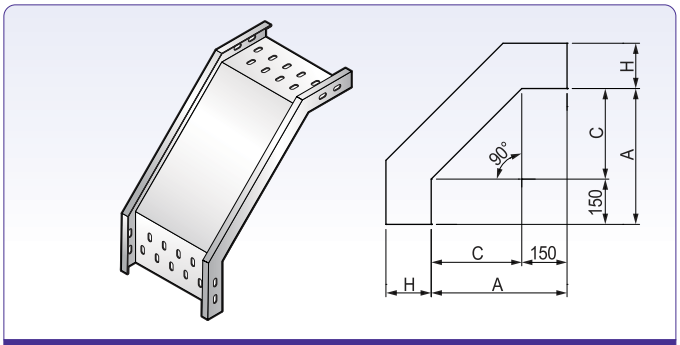

Square Type

W	R & C	90˚ VO DIMENSION A	Item No (Round Type)	Item No (Square Type)
300	300	450	P90VO–30**R30	P90VO–30**C30
	600	750	P90VO–30**R60	P90VO–30**C60
600	300	450	P90VO–60**R30	P90VO–60**C30
	600	750	P90VO–60**R60	P90VO–60**C60
900	300	450	P90VO–90**R30	P90VO–90**C30
	600	750	P90VO–90**R60	P90VO–90**C60

P60VO - 60˚ Vertical Outside Bend (Elbow)

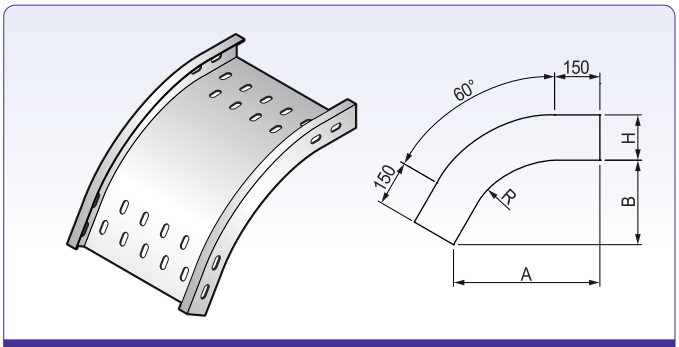

Round Type

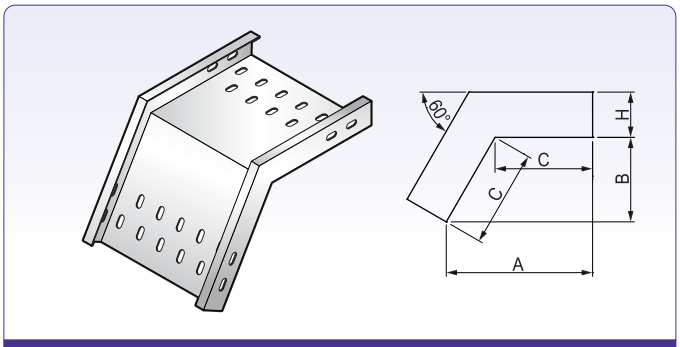

Square Type

W	R	60˚ VO DIMENSION A	B	C	Item No (Round Type)	Item No (Square Type)
300	300	485	280	323	P60VO–30**R30	P60VO–30**
	600	744	430	496	P60VO–30**R60	P60VO–30**
600	300	485	280	323	P60VO–60**R30	P60VO–60**
	600	744	430	496	P60VO–60**R60	P60VO–60**
900	300	485	280	323	P60VO–90**R30	P60VO–90**
	600	744	430	496	P60VO–90**R60	P60VO–90**

P45VO - 45˚ Vertical Outside Bend (Elbow)

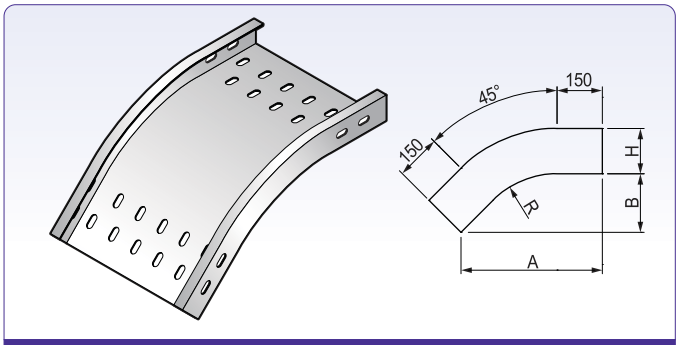

Round Type

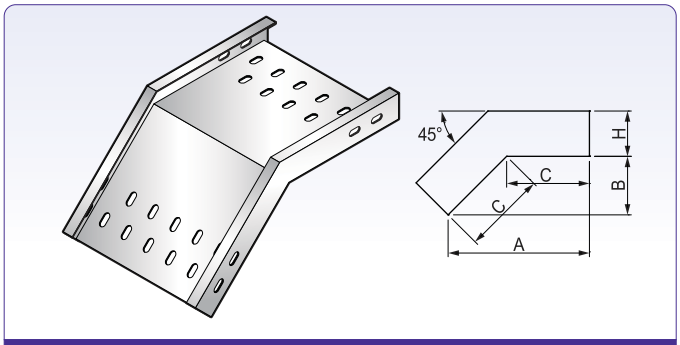

Square Type

W	R	45˚ VO DIMENSION			Item No (Round Type)	Item No (Square Type)
		A	B	C		
300	300	468	194	274	P45VO–30**R30	P45VO–30**
	600	681	282	399	P45VO–30**R60	P45VO–30**
600	300	468	194	274	P45VO–60**R30	P45VO–60**
	600	681	282	399	P45VO–60**R60	P45VO–60**
900	300	468	194	274	P45VO–90**R30	P45VO–90**
	600	681	282	399	P45VO–90**R60	P45VO–90**

P30VO - 30˚ Vertical Outside Bend (Elbow)

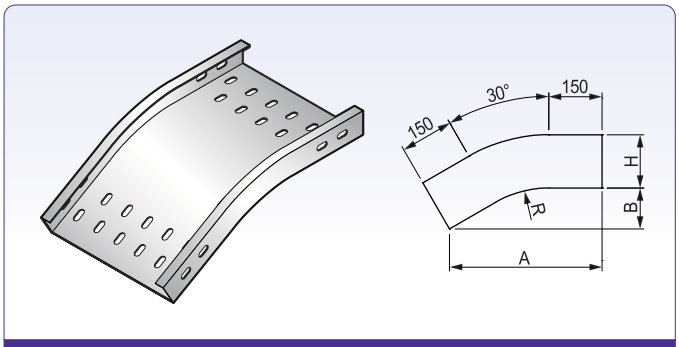

Round Type

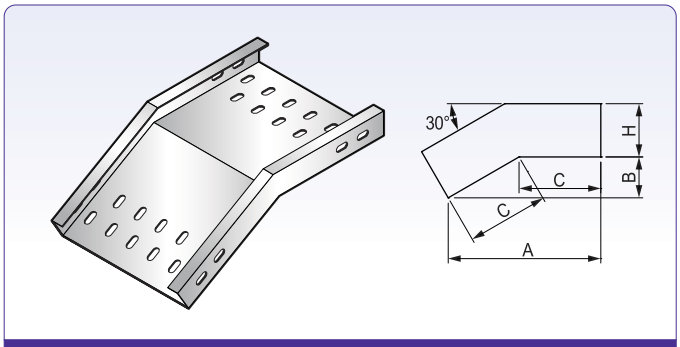

Square Type

W	R	30˚ VO DIMENSION			Item No (Round Type)	Item No (Square Type)
		A	B	C		
300	300	429	115	230	P30VO–30**R30	P30VO–30**
	600	580	156	311	P30VO–30**R60	P30VO–30**
600	300	429	115	230	P30VO–60**R30	S30VO–60**
	600	580	159	311	P30VO–60**R60	P30VO–60**
900	300	429	115	230	P30VO–90**R30	P30VO–90**
	600	580	156	311	P30VO–90**R60	P30VO–90**

P90VI - 90˚ Vertical Inside Bend (Elbow)

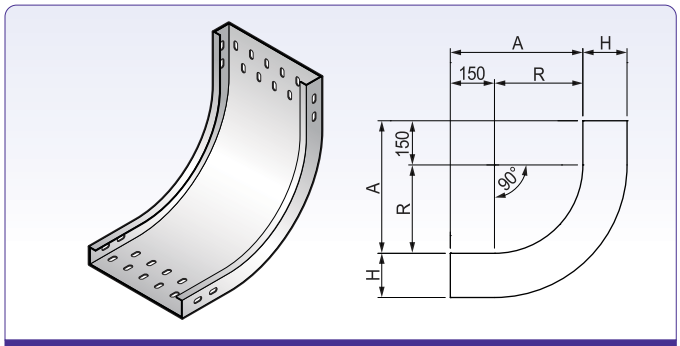

Round Type

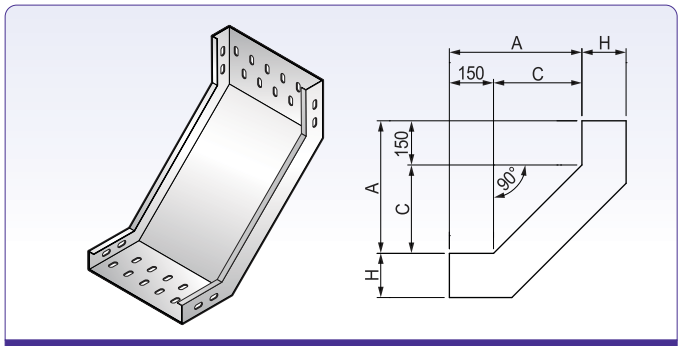

Square Type

W	R & C	90˚ VI DIMENSION A	Item No (Round Type)	Item No (Square Type)
300	300	450	P90VI–30**R30	P90VI–30**C30
	600	750	P90VI–30**R60	P90VI–30**C60
600	300	450	P90VI–60**R30	P90VI–60**C30
	600	750	P90VI–60**R60	P90VI–60**C60
900	300	450	P90VI–90**R30	P90VI–90**C30
	600	750	P90VI–90**R60	P90VI–90**C60

P60VI - 60˚ Vertical Inside Bend (Elbow)

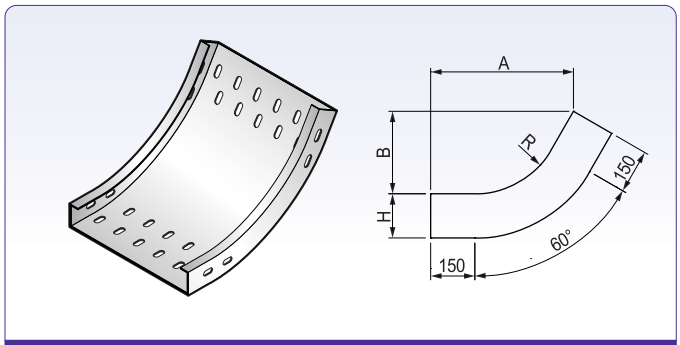

Round Type

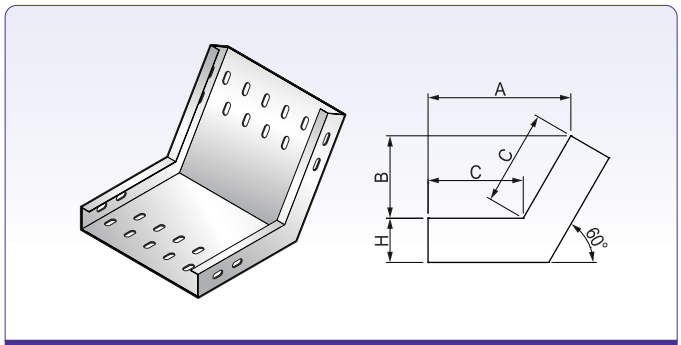

Square Type

W	R	60˚ VI DIMENSION A	B	C	Item No (Round Type)	Item No (Square Type)
300	300	485	280	323	P60VI–30**R30	P60VI–30**
	600	744	430	496	P60VI–30**R60	P60VI–30**
600	300	485	280	323	P60VI–60**R30	P60VI–60**
	600	744	430	496	P60VI–60**R60	P60VI–60**
900	300	485	280	323	P60VI–90**R30	P60VI–90**
	600	744	430	496	P60VI–90**R60	P60VI–90**

P45VI - 45˚ Vertical Inside Bend (Elbow)

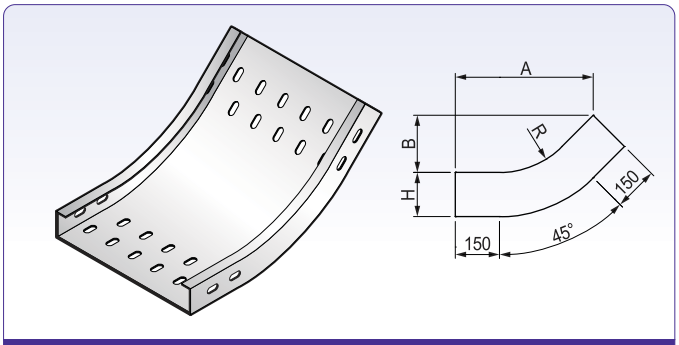

Round Type

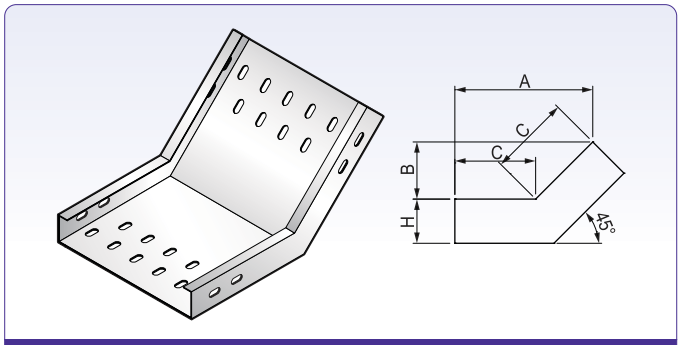

Square Type

W	R	45˚ VI DIMENSION			Item No (Round Type)	Item No (Square Type)
		A	B	C		
300	300	468	194	274	P45VI–30**R30	P45VI–30**
	600	681	282	399	P45VI–30**R60	P45VI–30**
600	300	468	194	274	P45VI–60**R30	P45VI–60**
	600	681	282	399	P45VI–60**R60	P45VI–60**
900	300	468	194	274	P45VI–90**R30	P45VI–90**
	600	681	282	399	P45VI–90**R60	P45VI–90**

P30VI - 30˚ Vertical Inside Bend (Elbow)

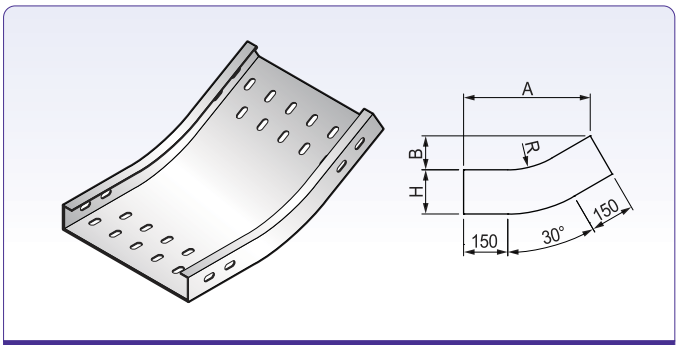

Round Type

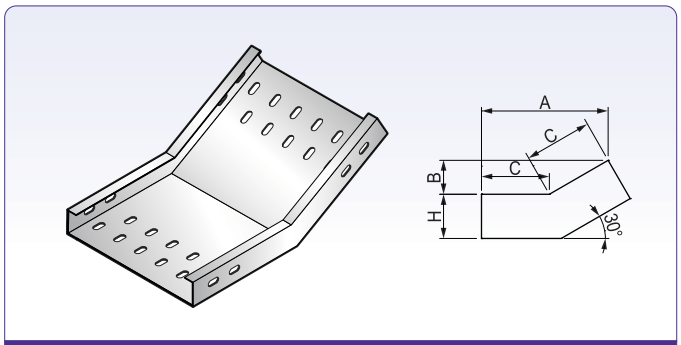

Square Type

W	R	30˚ VI DIMENSION			Item No (Round Type)	Item No (Square Type)
		A	B	C		
300	300	429	115	230	P30VI–30**R30	P30VI–30**
	600	580	156	311	P30VI–30**R60	P30VI–30**
600	300	429	115	230	P30VI–60**R30	P30VI–60**
	600	580	159	311	P30VI–60**R60	P30VI–60**
900	300	429	115	230	P30VI–90**R30	P30VI–90**
	600	580	156	311	P30VI–90**R60	P30VI–90**

PHT - Horizontal Tee Bend (Elbow)

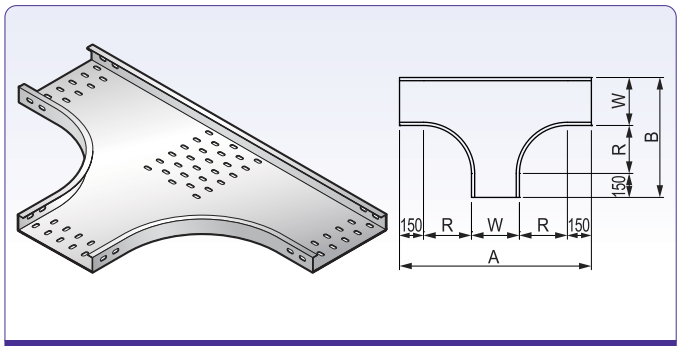

Round Type

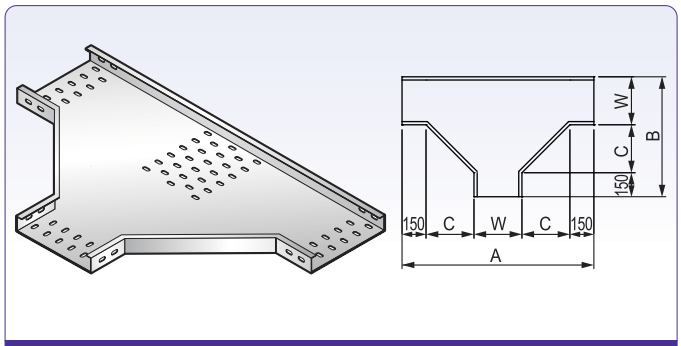

Square Type

W	R & C	Horizontal Tee DIMENSION		Item No (Round Type)	Item No (Square Type)
		A	B		
300	300	1200	750	PHT–30**R30	PHT–30**C30
	600	1800	1050	PHT–30**R60	PHT–30**C60
600	300	1500	1050	PHT–60**R30	PHT–60**C30
	600	2100	1350	PHT–60**R60	PHT–60**C60
900	300	1800	1350	PHT–90**R30	PHT–90**C30
	600	2400	1650	PHT–90**R60	PHT–90**C60

PHC - Horizontal Cross Bend (Elbow)

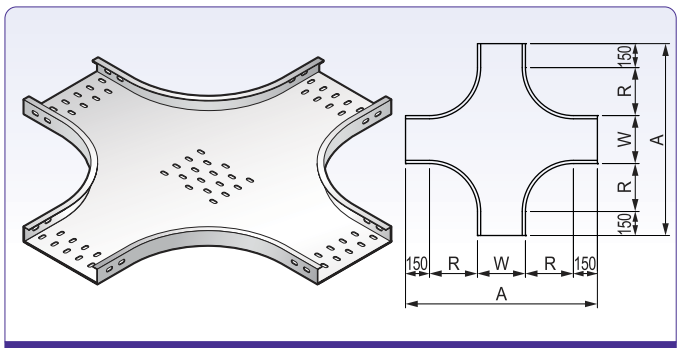

Round Type

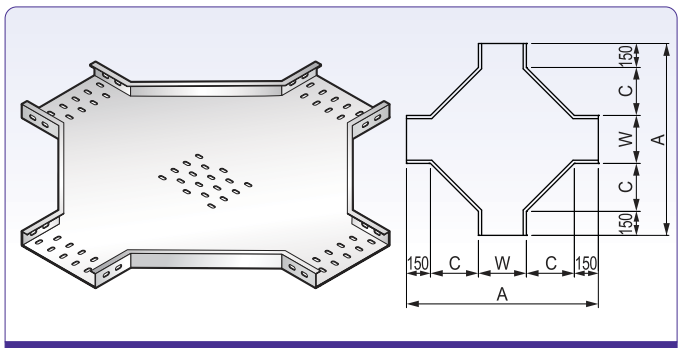

Square Type

W	R & C	Horizontal Cross DIMENSION	Item No (Round Type)	Item No (Square Type)
		A		
300	300	1200	PHC–30**R30	PHC–30**C30
	600	1800	PHC–30**R60	PHC–30**C60
600	300	1500	PHC–60**R30	PHC–60**C30
	600	2100	PHC–60**R60	PHC–60**C60
900	300	1800	PHC–90**R30	PHC–90**C30
	600	2400	PHC–90**R60	PHC–90**C60

PVT - Vertical Tee Bend (Elbow)

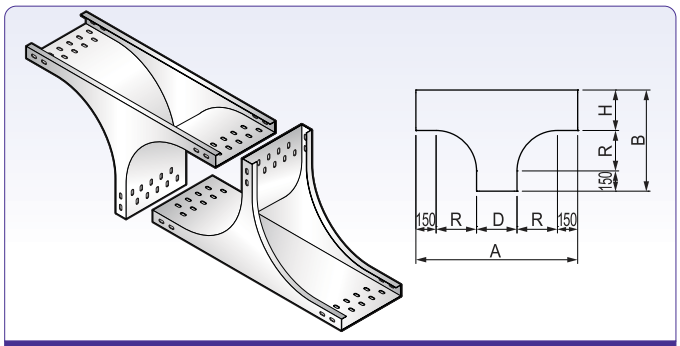

Round Type

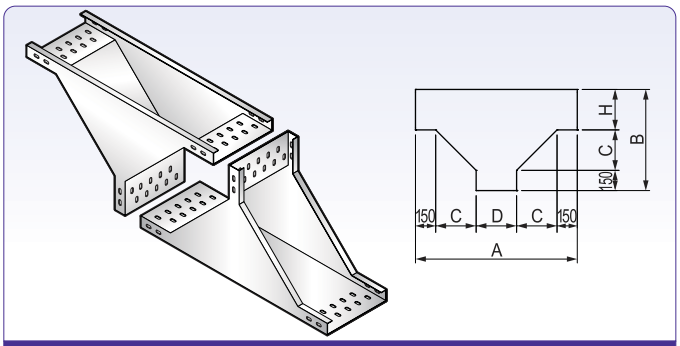

Square Type

W	R & C	Vertical Tee DIMENSION			Item No (Round Type)	Item No (Square Type)
		A	B	D & H		
300	300	1100	650	200	PVT–3020R30	PVT–3020C30
	600	1700	950	200	PVT–3020R60	PVT–3020C60
600	300	1100	650	200	PVT–6020R30	PVT–6020C30
	600	1700	950	200	PVT–6020R60	PVT–6020C60
900	300	1100	650	200	PVT–9020R30	PVT–9020C30
	600	1700	950	200	PVT–9020R60	PVT–9020C60

PSR, PLR, PRR - Reducer

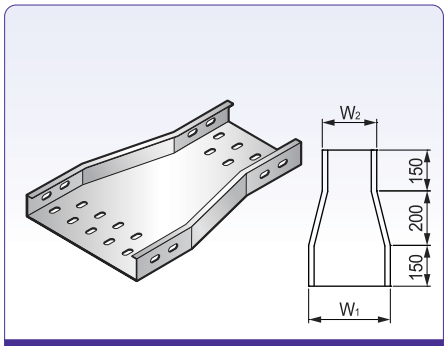

Straight

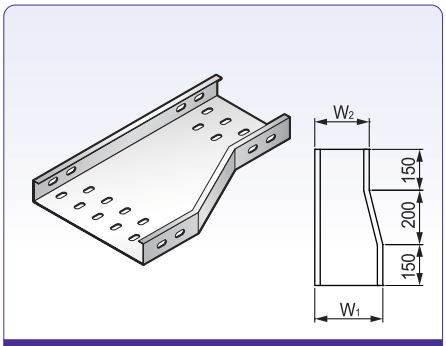

Left Hand

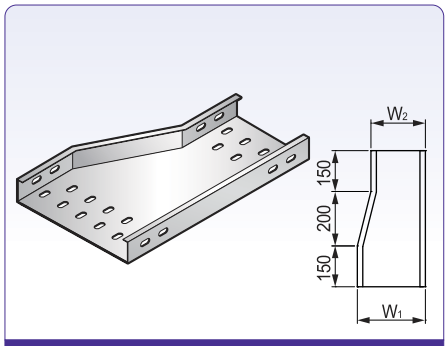

Right Hand

W_1	W_2	Item No (Straigt Hand)	Item No (Left Hand)	Item No (Right Hand)
300	200	PSR–3020**	PLR–3020**	PRR–3020**
600	300	PSR–6030**	PLR–6030**	PRR–6030**
	400	PSR–6040**	PLR–6040**	PRR–6040**
900	400	PSR–9040**	PLR–9040**	PRR–9040**
	600	PSR–9060**	PLR–9060**	PRR–9060**

Item Numbering

PJC – 5 5

- Item code (Perforated Joint Connector)
- Width
- Height

PSRC - 5 5 5

- Item code (Perforated Reducing Joint Connector Straight)
- Width 1
- Width 2
- Height

Joint Connector(Splice Plate)

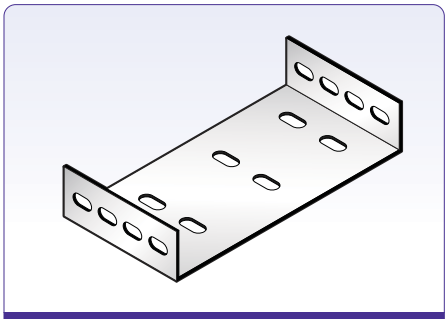

PJC (C-Type)

■ Perforated Joint Connector

Item No	Depth(H)
PJC–**5	50

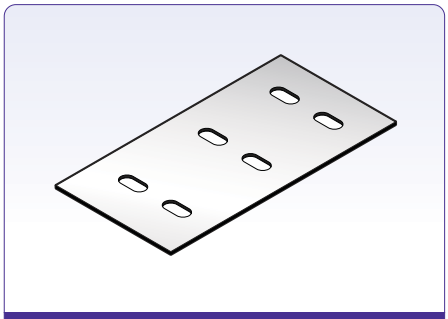

PJI (I-Type)

■ Perforated Joint Connector

Item No	Depth(H)
PJI–**	

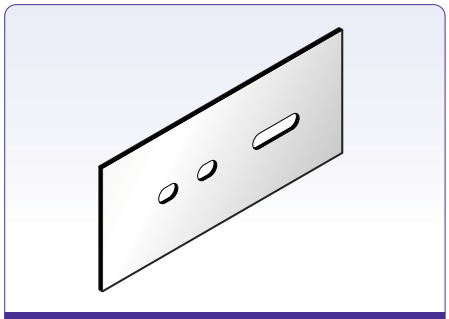

PEC

■ Perforated Expansion Joint Connector

Item No	Depth(H)
PEC–**5	50

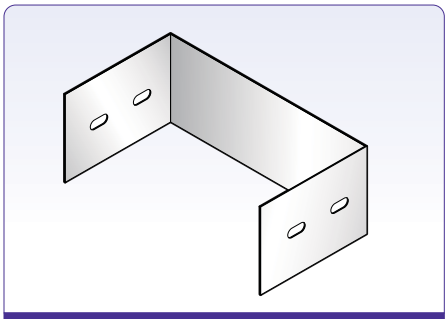

EP

■ End Plate

Item No	Depth(H)
EP–**5	50

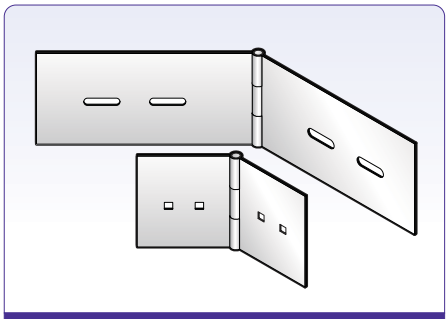

PAHJ

■ Perforated Adjustable Horizontal Joint Connector

Item No	Depth(H)
PAHJ–5	50

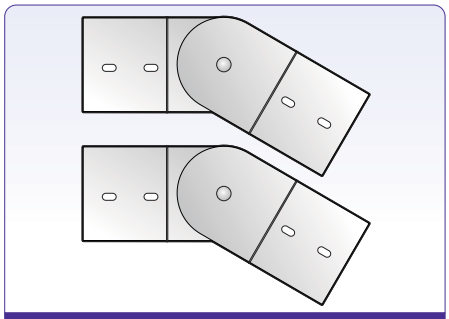

PAVJ

■ Perforated Adjustable Vertical Joint Connector

Item No	Depth(H)
PAVJ–5	50

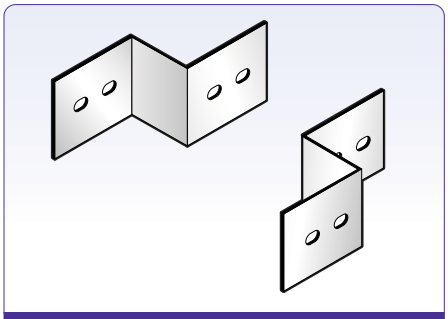

PSRC

■ Perforated Straight Reducing Joint Connector

Item No	Depth(H)
PSRC–****5	50

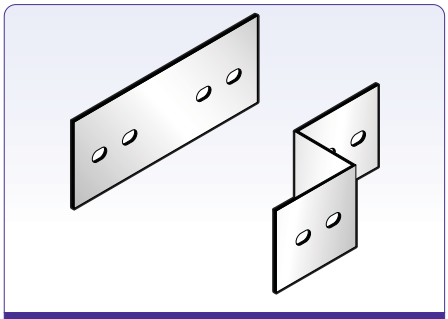

PLRC / PRRC

■ Perforated Left & Right Reducing Joint Connector

Item No	Depth(H)
PLRC(PRRC)–****5	50

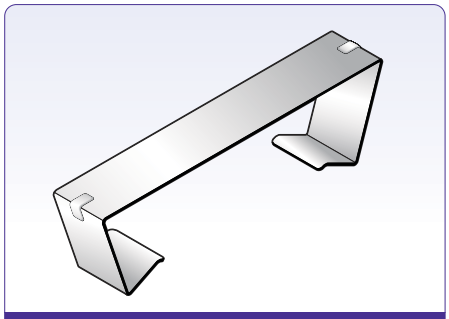

PHCB

■ Perforated Cover Band

Item No	Depth(H)
PHCB–**5	50

5. Cover for Ladder, Solid & Perforated

Specification Numbering

C S – C S

- CS
- CF
- CV
- CP
- CR

- **CS**-Carbon Steel
- **HGI**-Hot-dip Zinc-coated Steel
- **SUS**-Stainless Steel

Item Numbering

C 90 H B – 30 1.5 R 30

- **C** : Cover
- **ST** : Straight
- **90~30HB** : 90°~30° Horizontal bend
- **HT** : Horizontal tee
- **HC** : Horizontal cross
- **HO** : Horizontal offset
- **VT** : Vertical tee
- **90° ~30° VI** : 90°~30° Vertical inside
- **90° ~30° VO** : 90°~30° Vertical outside
- Width
- Height
- **R30** : Radius 300mm
- **R40** : Radius 400mm
- **R60** : Radius 600mm
- **C30** : Square 300mm
- **C40** : Square 400mm
- **C60** : Square 600mm
- **L24** : Length 2400mm
- **L30** : Length 3000mm
- **L60** : Length 6000mm

Cover Straight Tray

- Material : Carbon Steel
  Stainless Steel
  Hot–dip Zinc–coated Steel
- Fabrication : Electro ARC of CO2, TIG Welding or Argon Welding
- Finish : Hot Dip Galvanizing
  Acid Pickling after Fabrication
  Anodic Oxidation
  Paint
  Natural

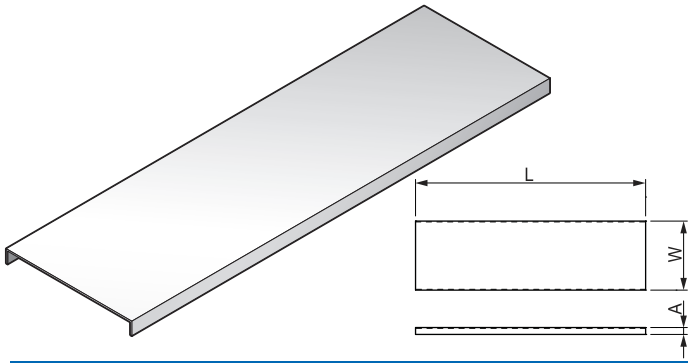

ST

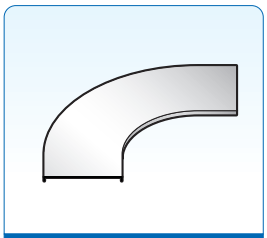

CS-90HB

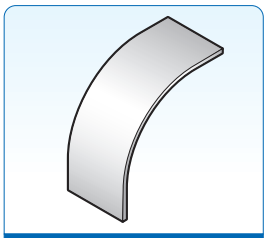

CS-90VO

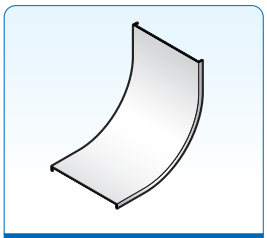

CS-90VI

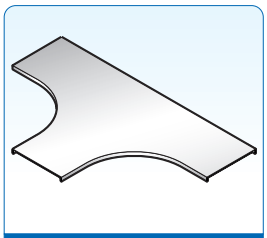

CS-HT

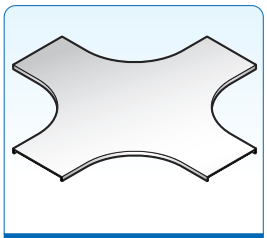

CS-HC

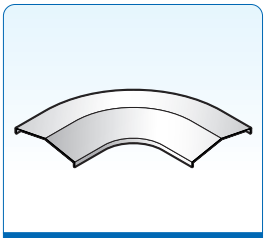

CR-90HB

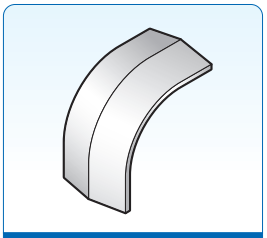

CR-90VO

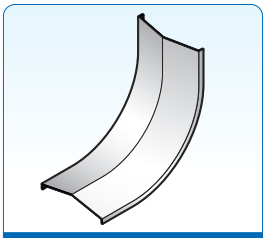

CR-90VI

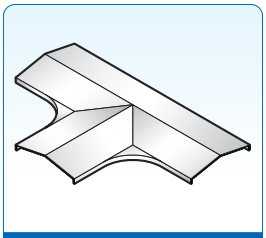

CR-HT

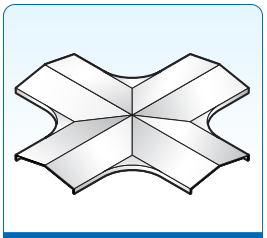

CR-HC

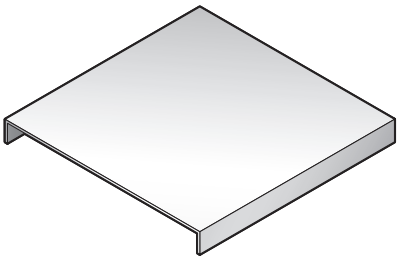

■CS

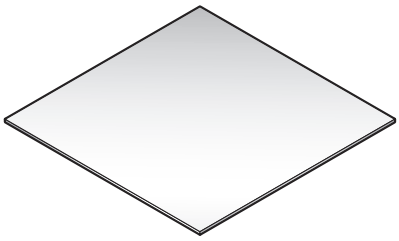

■CF

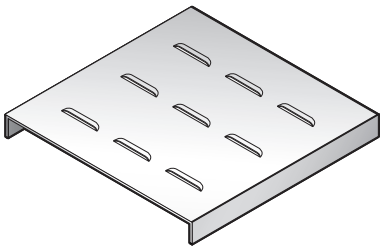

■CV

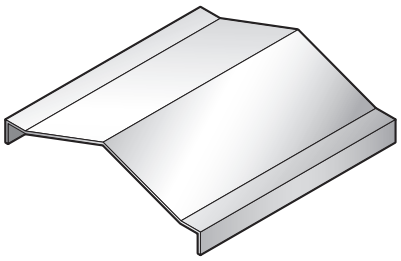

■CP

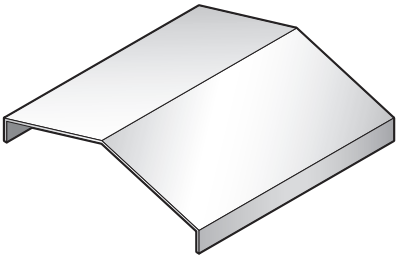

■CR

■CS–Standard Cover

Characteristic	Dimension					Item No.
	W		A	B	L	
	IN	OUT				
CS	308	350	15	1.6	3000	CST–301.5L30
	408	450	15	1.6	3000	CST–401.5L30
	508	550	15	1.6	3000	CST–501.5L30
	608	650	15	2.3	1500	CST–601.5L15
	708	750	15	2.3	1500	CST–701.5L15
	808	850	15	2.3	1500	CST–801.5L15
	908	950	15	2.3	1500	CST–901.5L15

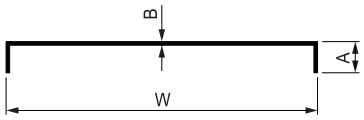

- A : Flange
- B : Thickness
- W : Width

■CF–Flat Cover

Characteristic	Dimension				Item No.
	W		B	L	
	IN	OUT			
CF	308	350	1.6	3000	CST–30L30
	408	450	1.6	3000	CST–40L30
	508	550	1.6	3000	CST–50L30
	608	650	2.3	1500	CST–60L15
	708	750	2.3	1500	CST–70L15
	808	850	2.3	1500	CST–80L15
	908	950	2.3	1500	CST–90L15

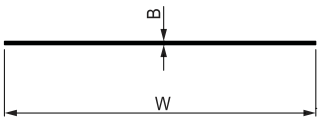

- B : Thickness
- W : Width

CV–Ventilated Cover

Characteristic	Dimension					Item No.
	W		A	B	L	
	IN	OUT				
CV 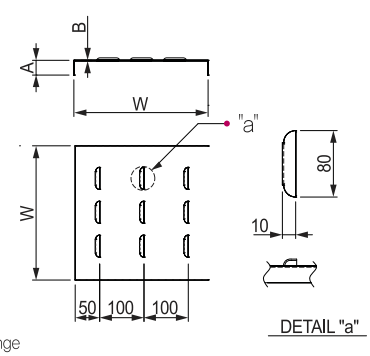	308	350	15	1.6	3000	CST–301.5L30
	408	450	15	1.6	3000	CST–401.5L30
	508	550	15	1.6	3000	CST–501.5L30
	608	650	15	2.3	1500	CST–601.5L15
	708	750	15	2.3	1500	CST–701.5L15
	808	850	15	2.3	1500	CST–801.5L15
	908	950	15	2.3	1500	CST–901.5L15

- A : Flange
- B : Thickness
- W : Width

CP–Peaked Cover

Characteristic		Dimension				Item No.
		W		B	L	
		IN	OUT			
CP-A 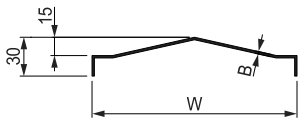	CP-B 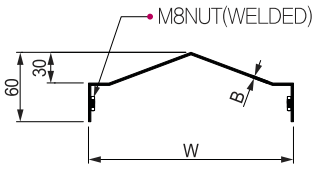	308	350	1.6	3000	CST–30**L30
		408	450	1.6	3000	CST–40**L30
		508	550	1.6	3000	CST–50**L30
		608	650	2.3	1500	CST–60**L15
		708	750	2.3	1500	CST–70**L15
		808	850	2.3	1500	CST–80**L15
		908	950	2.3	1500	CST–90**L15

- B : Thickness
- W : Width

CR–Rain Peaked Cover

Characteristic		Dimension				Item No.
		W		B	L	
		IN	OUT			
CR-A 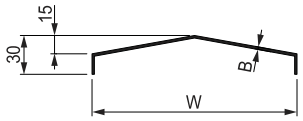	CR-B 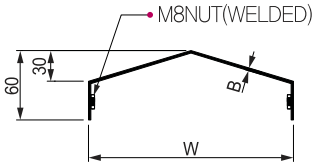	308	350	1.6	3000	CST–30**L30
		408	450	1.6	3000	CST–40**L30
		508	550	1.6	3000	CST–50**L30
		608	650	2.3	1500	CST–60**L15
		708	750	2.3	1500	CST–70**L15
		808	850	2.3	1500	CST–80**L15
		908	950	2.3	1500	CST–90**L15

- B : Thickness
- W : Width

C90HB - 90˚ Horizontal Bend (Elbow)

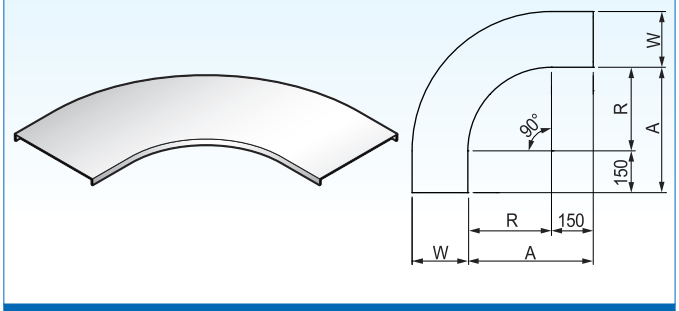

Round Type

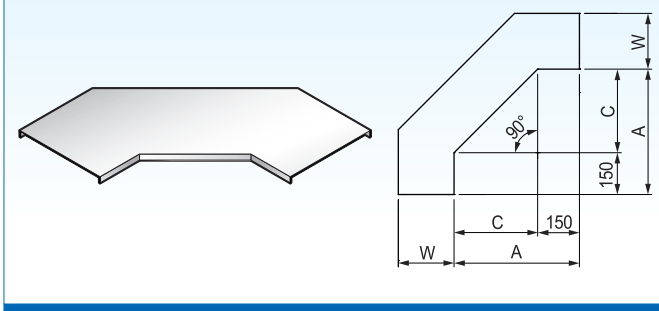

Square Type

W	R & C	90˚ HB DIMENSION A	Item No (Round Type)	Item No (Square Type)
300	300	450	C90HB–30**R30	C90HB–30**C30
	600	750	C90HB–30**R60	C90HB–30**C60
600	300	450	C90HB–60**R30	C90HB–60**C30
	600	750	C90HB–60**R60	C90HB–60**C60
900	300	450	C90HB–90**R30	C90HB–90**C30
	600	750	C90HB–90**R60	C90HB–90**C60

C60HB - 60˚ Horizontal Bend (Elbow)

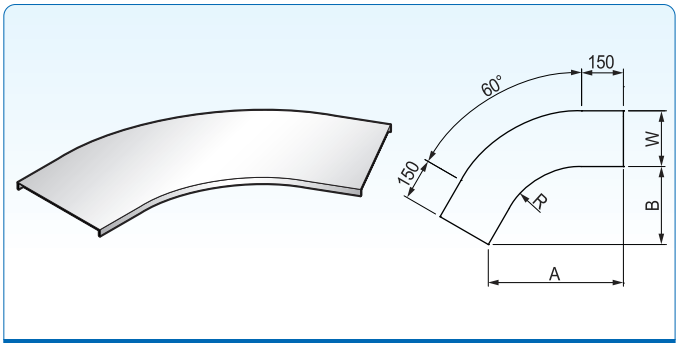

Round Type

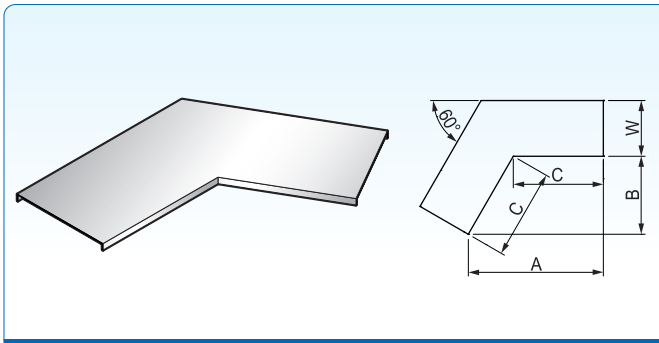

Square Type

W	R	60˚ HB DIMENSION A	B	C	Item No (Round Type)	Item No (Square Type)
300	300	485	280	323	C60HB–30**R30	C60HB–30**
	600	744	430	496	C60HB–30**R60	C60HB–30**
600	300	485	280	323	C60HB–60**R30	C60HB–60**
	600	744	430	496	C60HB–60**R60	C60HB–60**
900	300	485	280	323	C60HB–90**R30	C60HB–90**
	600	744	430	496	C60HB–90**R60	C60HB–90**

C45HB - 45˚ Horizontal Bend (Elbow)

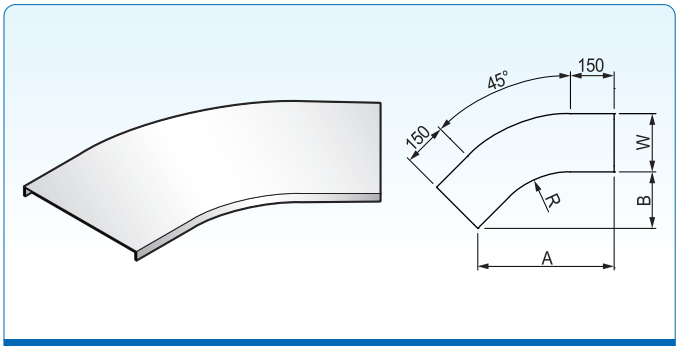

Round Type

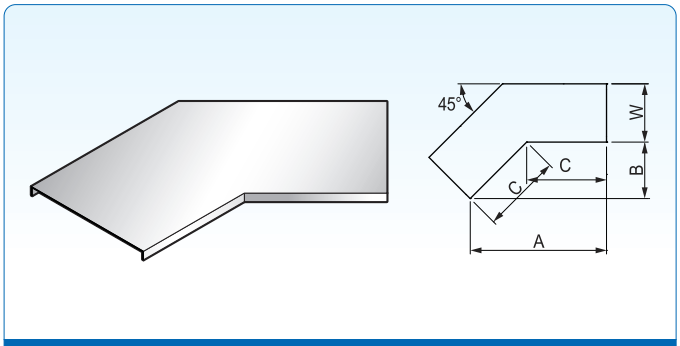

Square Type

W	R	45˚ HB DIMENSION			Item No (Round Type)	Item No (Square Type)
		A	B	C		
300	300	468	194	274	C45HB–30**R30	C45HB–30**
	600	680	282	399	C45HB–30**R60	C45HB–30**
600	300	468	194	274	C45HB–60**R30	C45HB–60**
	600	680	282	399	C45HB–60**R60	C45HB–60**
900	300	468	194	274	C45HB–90**R30	C45HB–90**
	600	680	282	399	C45HB–90**R60	C45HB–90**

C30HB - 30˚ Horizontal Bend (Elbow)

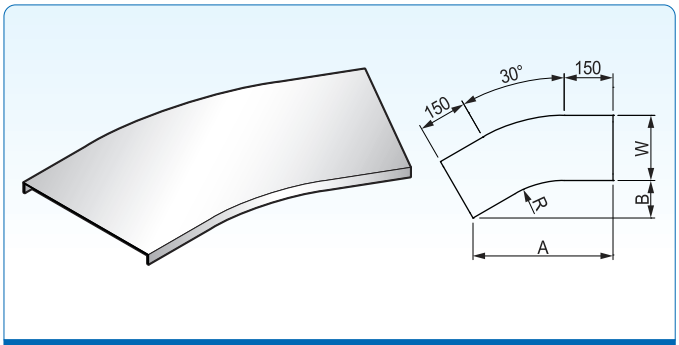

Round Type

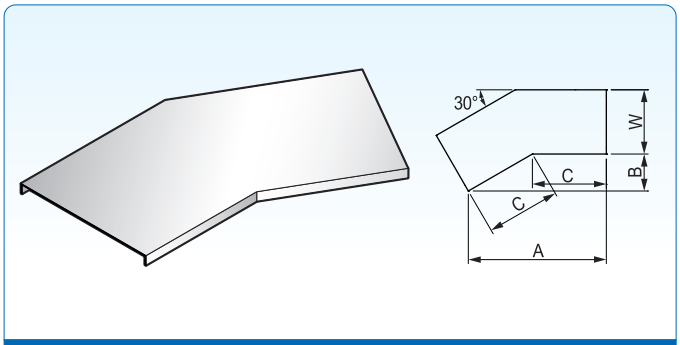

Square Type

W	R	30˚ HB DIMENSION			Item No (Round Type)	Item No (Square Type)
		A	B	C		
300	300	430	115	230	C30HB–30**R30	C30HB–30**
	600	580	155	311	C30HB–30**R60	C30HB–30**
600	300	430	115	230	C30HB–60**R30	C30HB–60**
	600	580	155	311	C30HB–60**R60	C30HB–60**
900	300	430	115	230	C30HB–90**R30	C30HB–90**
	600	580	155	311	C30HB–90**R60	C30HB–90**

C90VO - 90˚ Vertical Outside Bend (Elbow)

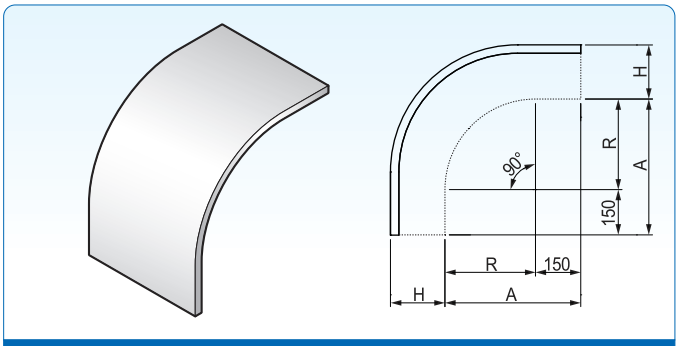

Round Type

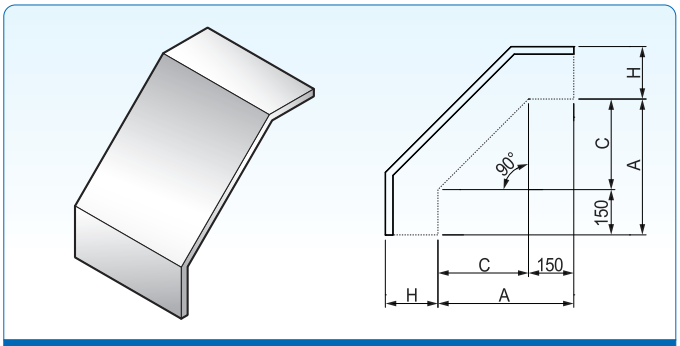

Square Type

W	R & C	90˚ VO DIMENSION A	Item No (Round Type)	Item No (Square Type)
300	300	450	C90VO–30**R30	C90VO–30**C30
	600	750	C90VO–30**R60	C90VO–30**C60
600	300	450	C90VO–60**R30	C90VO–60**C30
	600	750	C90VO–60**R60	C90VO–60**C60
900	300	450	C90VO–90**R30	C90VO–90**C30
	600	750	C90VO–90**R60	C90VO–90**C60

C60VO - 60˚ Vertical Outside Bend (Elbow)

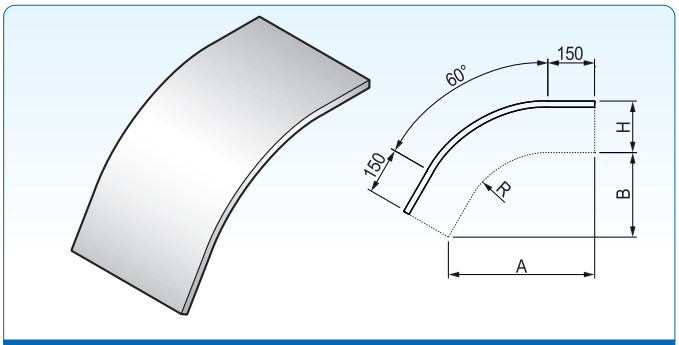

Round Type

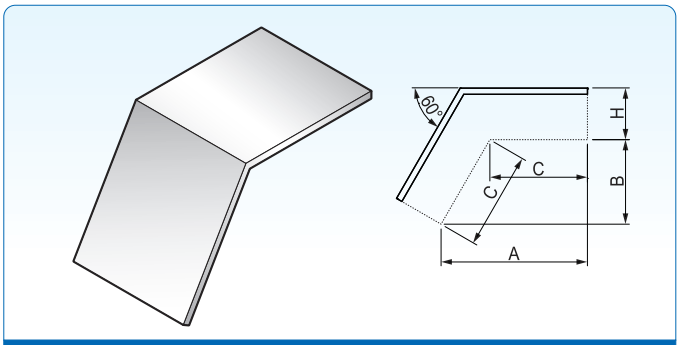

Square Type

W	R	60˚ VO DIMENSION A	B	C	Item No (Round Type)	Item No (Square Type)
300	300	485	280	323	C60VO–30**R30	C60VO–30**
	600	744	430	496	C60VO–30**R60	C60VO–30**
600	300	485	280	323	C60VO–60**R30	C60VO–60**
	600	744	430	496	C60VO–60**R60	C60VO–60**
900	300	485	280	323	C60VO–90**R30	C60VO–90**
	600	744	430	496	C60VO–90**R60	C60VO–90**

C45VO - 45˚ Vertical Outside Bend (Elbow)

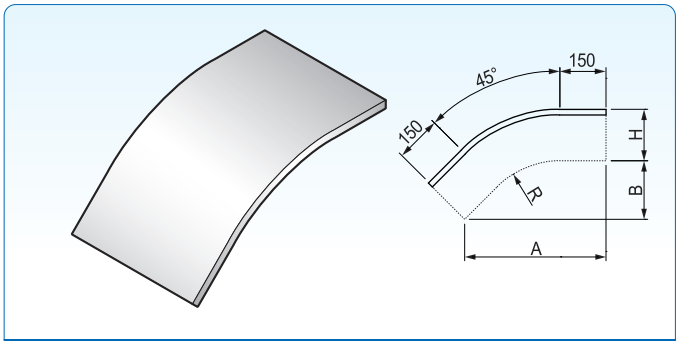

Round Type

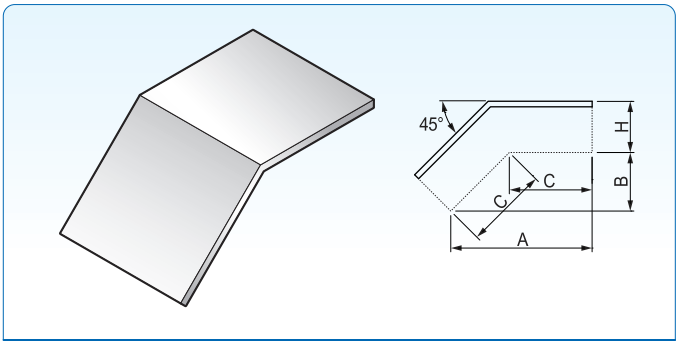

Square Type

W	R	45˚ VO DIMENSION			Item No (Round Type)	Item No (Square Type)
		A	B	C		
300	300	468	194	274	C45VO–30**R30	C45VO–30**
	600	681	282	399	C45VO–30**R60	C45VO–30**
600	300	468	194	274	C45VO–60**R30	C45VO–60**
	600	681	282	399	C45VO–60**R60	C45VO–60**
900	300	468	194	274	C45VO–90**R30	C45VO–90**
	600	681	282	399	C45VO–90**R60	C45VO–90**

C30VO - 30˚ Vertical Outside Bend (Elbow)

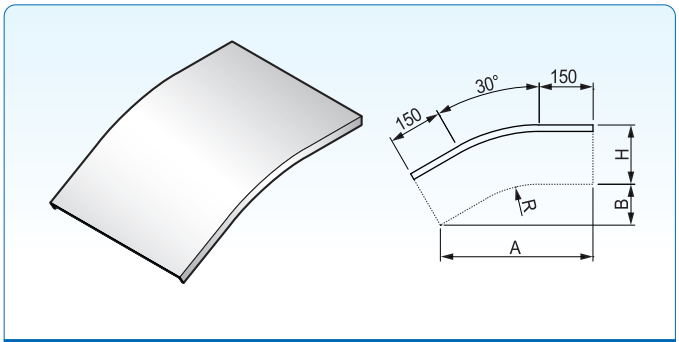

Round Type

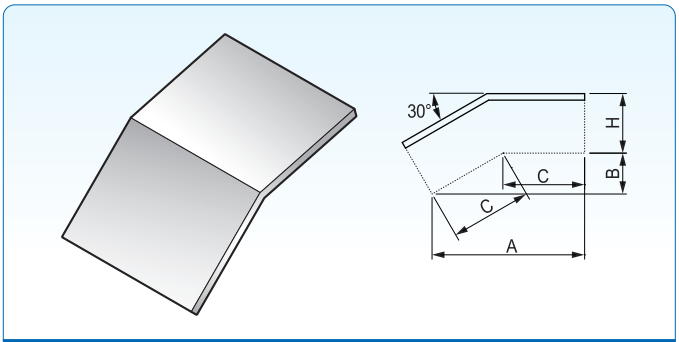

Square Type

W	R	30˚ VO DIMENSION			Item No (Round Type)	Item No (Square Type)
		A	B	C		
300	300	429	115	230	C30VO–30**R30	C30VO–30**
	600	580	156	311	C30VO–30**R60	C30VO–30**
600	300	429	115	230	C30VO–60**R30	C30VO–60**
	600	580	159	311	C30VO–60**R60	C30VO–60**
900	300	429	115	230	C30VO–90**R30	C30VO–90**
	600	580	156	311	C30VO–90**R60	C30VO–90**

C90VI - 90˚ Vertical Inside Bend (Elbow)

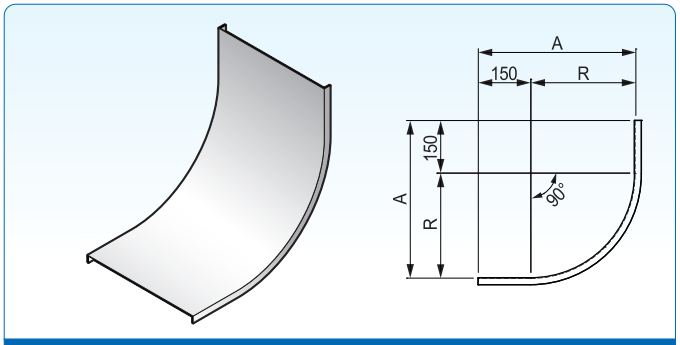

Round Type

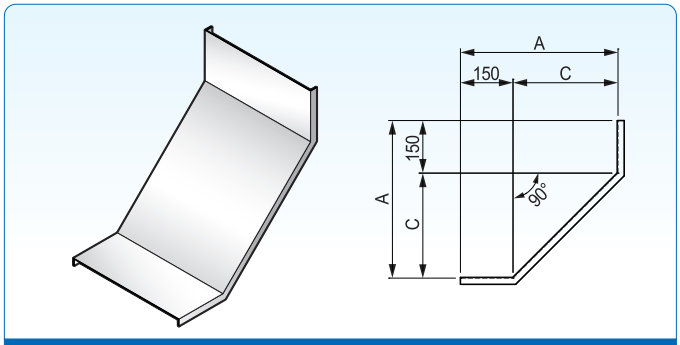

Square Type

W	R & C	90˚ VI DIMENSION A	Item No (Round Type)	Item No (Square Type)
300	300	450	C90VI–30**R30	C90VI–30**C30
	600	750	C90VI–30**R60	C90VI–30**C60
600	300	450	C90VI–60**R30	C90VI–60**C30
	600	750	C90VI–60**R60	C90VI–60**C60
900	300	450	C90VI–90**R30	C90VI–90**C30
	600	750	C90VI–90**R60	C90VI–90**C60

C60VI - 60˚ Vertical Inside Bend (Elbow)

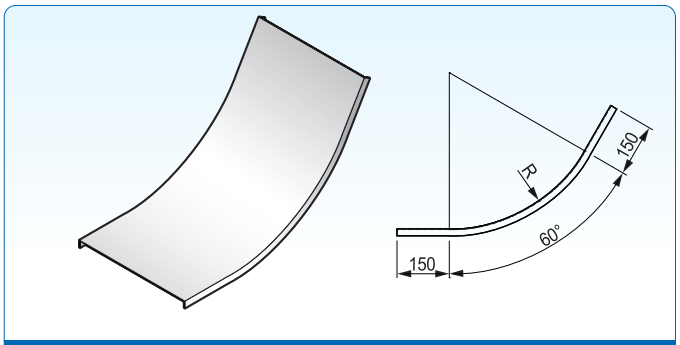

Round Type

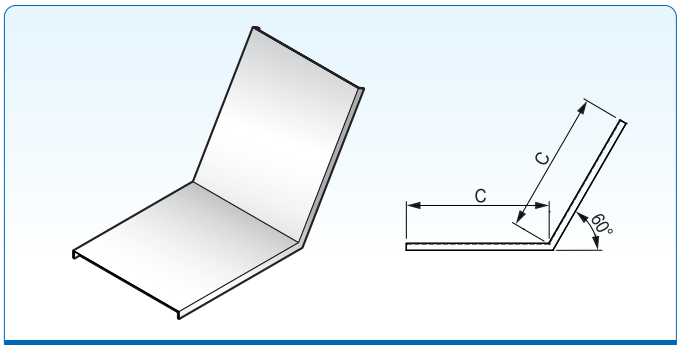

Square Type

W	R	60˚ VI DIMENSION C	Item No (Round Type)	Item No (Square Type)
300	300	323	C60VI–30**R30	C60VI–30**
	600	496	C60VI–30**R60	C60VI–30**
600	300	323	C60VI–60**R30	C60VI–60**
	600	496	C60VI–60**R60	C60VI–60**
900	300	323	C60VI–90**R30	C60VI–90**
	600	496	C60VI–90**R60	C60VI–90**

C45VI - 45˚ Vertical Inside Bend (Elbow)

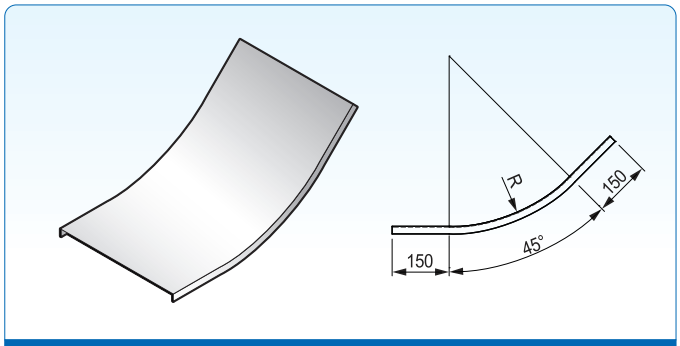

Round Type

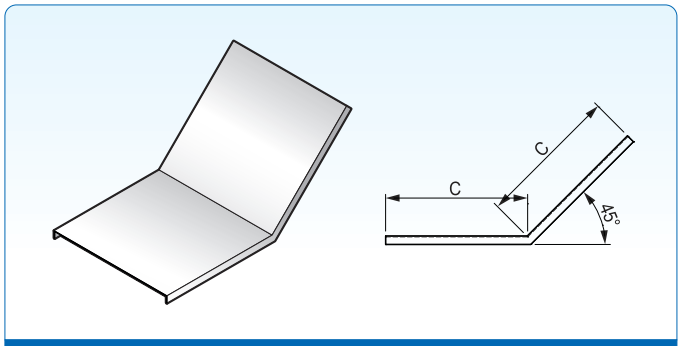

Square Type

W	R	45˚ VI DIMENSION C	Item No (Round Type)	Item No (Square Type)
300	300	274	C45VI–30**R30	C45VI–30**
	600	399	C45VI–30**R60	C45VI–30**
600	300	274	C45VI–60**R30	C45VI–60**
	600	399	C45VI–60**R60	C45VI–60**
900	300	274	C45VI–90**R30	C45VI–90**
	600	399	C45VI–90**R60	C45VI–90**

C30VI - 30˚ Vertical Inside Bend (Elbow)

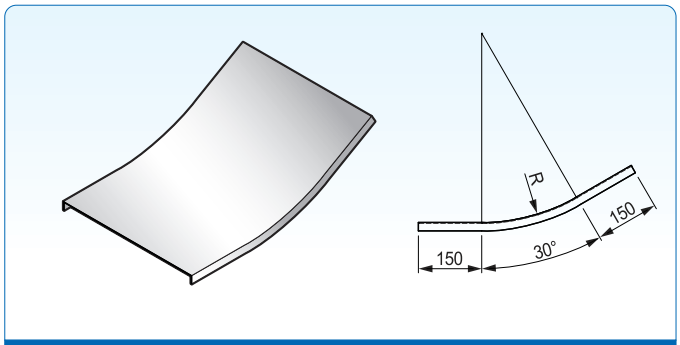

Round Type

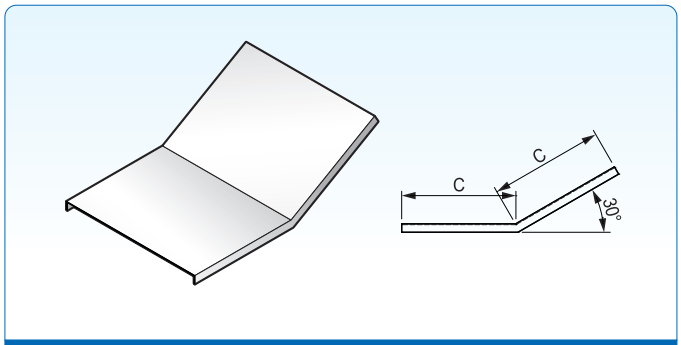

Square Type

W	R	30˚ VI DIMENSION C	Item No (Round Type)	Item No (Square Type)
300	300	230	C30VI–30**R30	C30VI–30**
	600	311	C30VI–30**R60	C30VI–30**
600	300	230	C30VI–60**R30	C30VI–60**
	600	311	C30VI–60**R60	C30VI–60**
900	300	230	C30VI–90**R30	C30VI–90**
	600	311	C30VI–90**R60	C30VI–90**

CHT - Horizontal Tee Bend (Elbow)

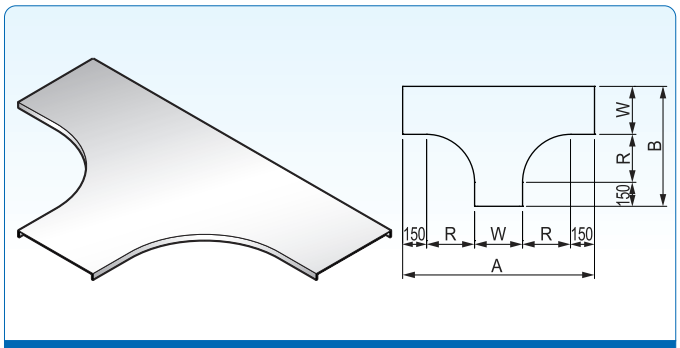

Round Type

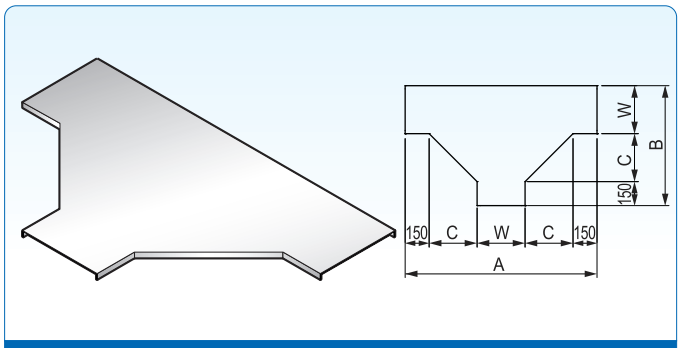

Square Type

W	R & C	Horizontal Tee DIMENSION		Item No (Round Type)	Item No (Square Type)
		A	B		
300	300	1200	750	CHT–30**R30	CHT–30**C30
	600	1800	1050	CHT–30**R60	CHT–30**C60
600	300	1500	1050	CHT–60**R30	CHT–60**C30
	600	2100	1350	CHT–60**R60	CHT–60**C60
900	300	1800	1350	CHT–90**R30	CHT–90**C30
	600	2400	1650	CHT–90**R60	CHT–90**C60

CHC - Horizontal Cross Bend (Elbow)

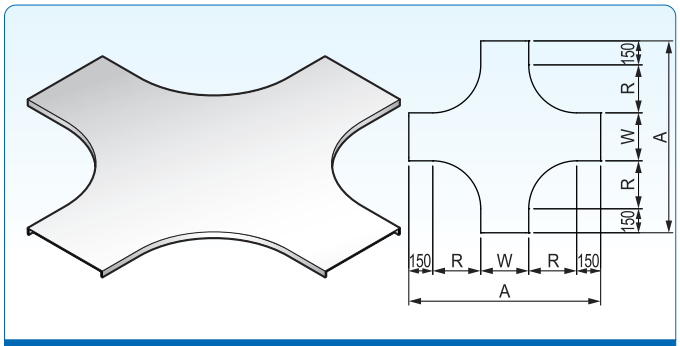

Round Type

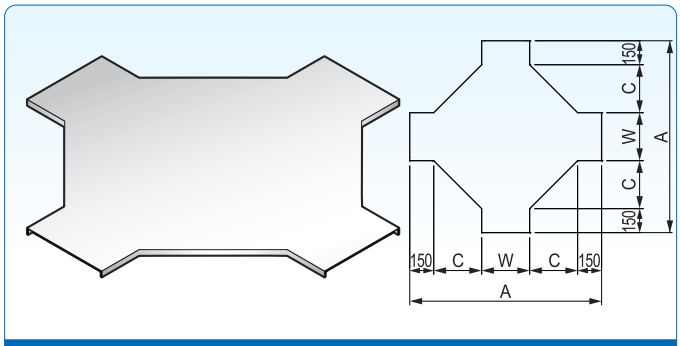

Square Type

W	R & C	Horizontal Cross DIMENSION	Item No (Round Type)	Item No (Square Type)
		A		
300	300	1200	CHC–30**R30	CHC–30**C30
	600	1800	CHC–30**R60	CHC–30**C60
600	300	1500	CHC–60**R30	CHC–60**C30
	600	2100	CHC–60**R60	CHC–60**C60
900	300	1800	CHC–90**R30	CHC–90**C30
	600	2400	CHC–90**R60	CHC–90**C60

CVT - Vertical Tee Bend (Elbow)

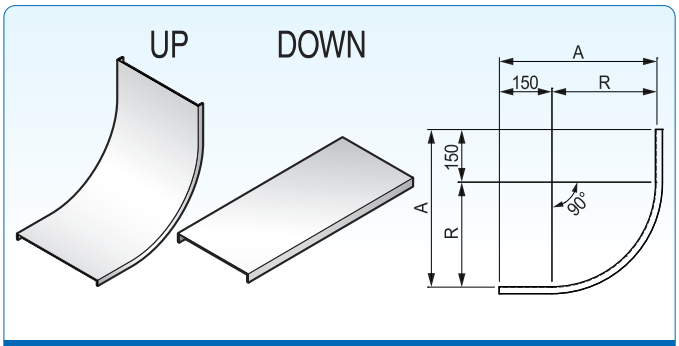

Round Type

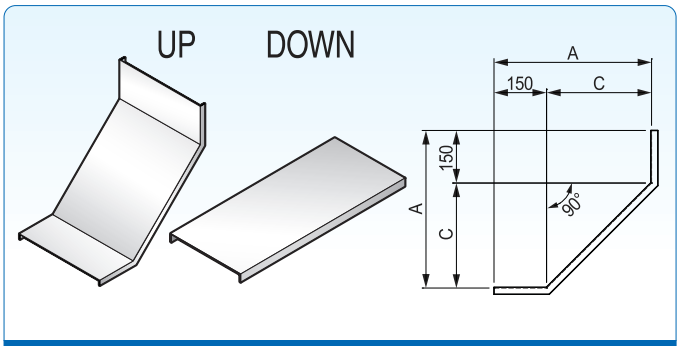

Square Type

W	R & C	A	Item No (Round Type)	Item No (Square Type)
300	300	450	CVT–30**R30	CVT–30**C30
	600	750	CVT–30**R60	CVT–30**C60
600	300	450	CVT–60**R30	CVT–60**C30
	600	750	CVT–60**R60	CVT–60**C60
900	300	450	CVT–90**R30	CVT–90**C30
	600	750	CVT–90**R60	CVT–90**C60

CSR, CLR, CRR - Reducer

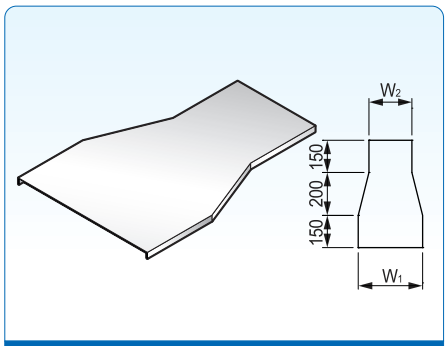

Straight

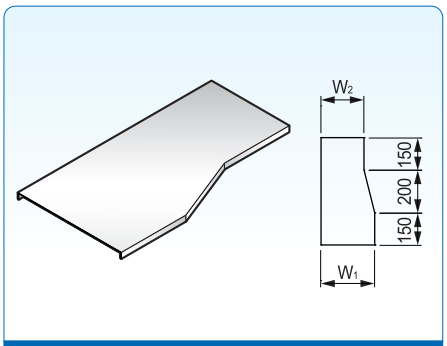

Left Hand

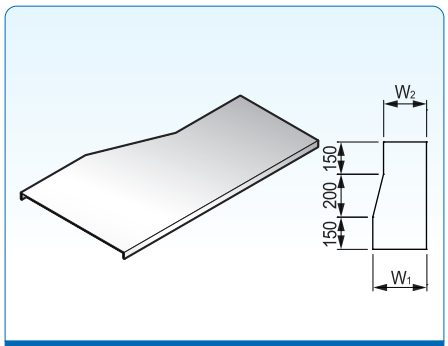

Right Hand

W_1	W_2	Item No (Straigt Hand)	Item No (Left Hand)	Item No (Right Hand)
300	200	CSR–3020**	CLR–3020**	CRR–3020**
600	300	CSR–6030**	CLR–6030**	CRR–6030**
	400	CSR–6040**	CLR–6040**	CRR–6040**
900	400	CSR–9040**	CLR–9040**	CRR–9040**
	600	CSR–9060**	CLR–9060**	CRR–9060**

Item Numbering

CBO – 10 10

- **Item code** (Cover Band O-Type)
- **Width**
- **Height**

Cover Band

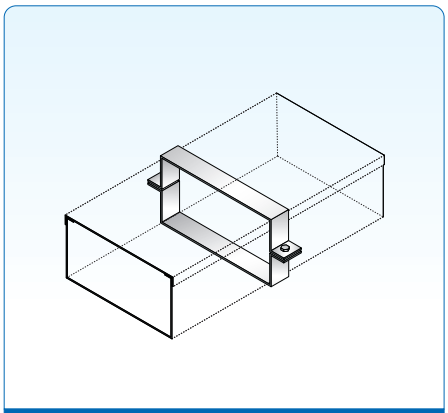

CBO (O-Type)

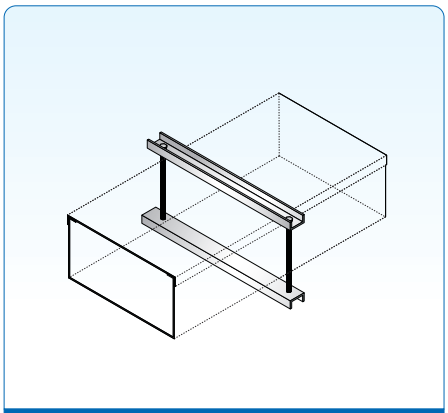

CBH (H-Type)

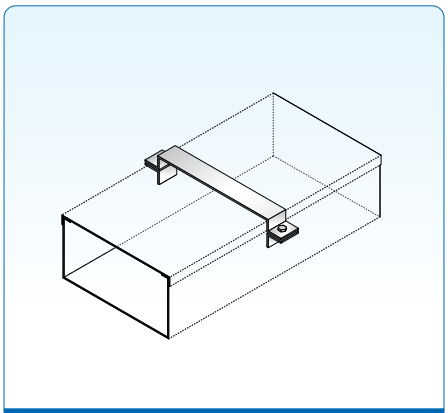

CBU-(U-Type)

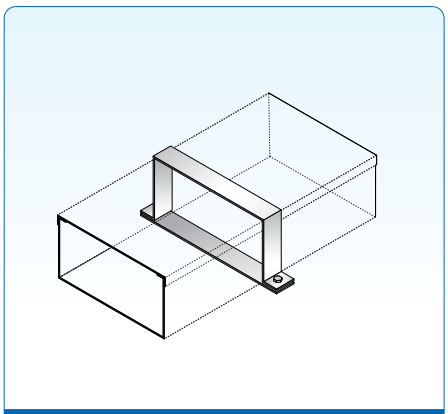

CBD (D-Type)

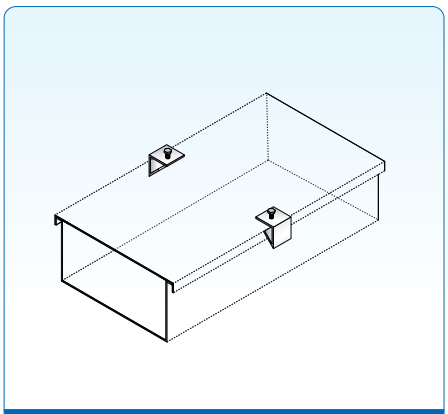

CBA (A-Type)

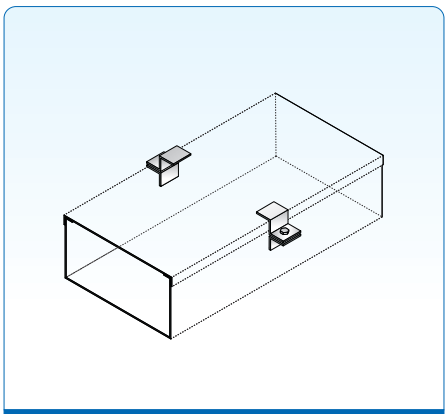

CBZ (Z-Type)

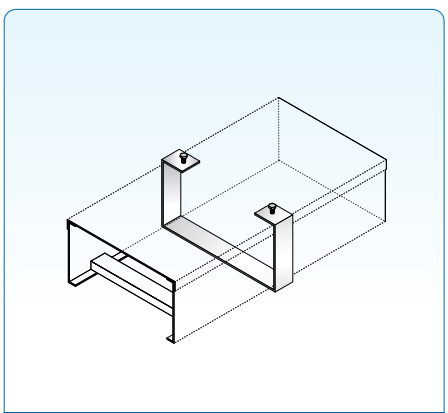

CBC (C-Type)

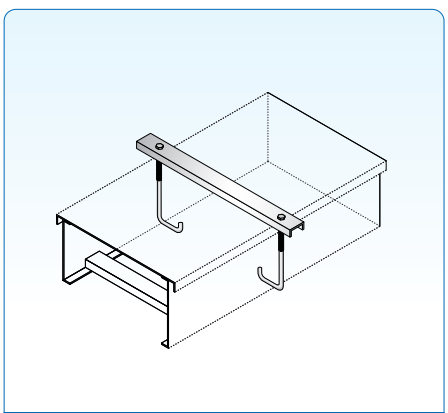

CBL (L-Type)

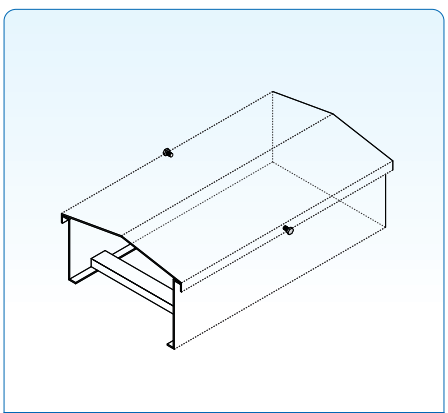

CBR (R-Type)

MEMO

6. SHAFT

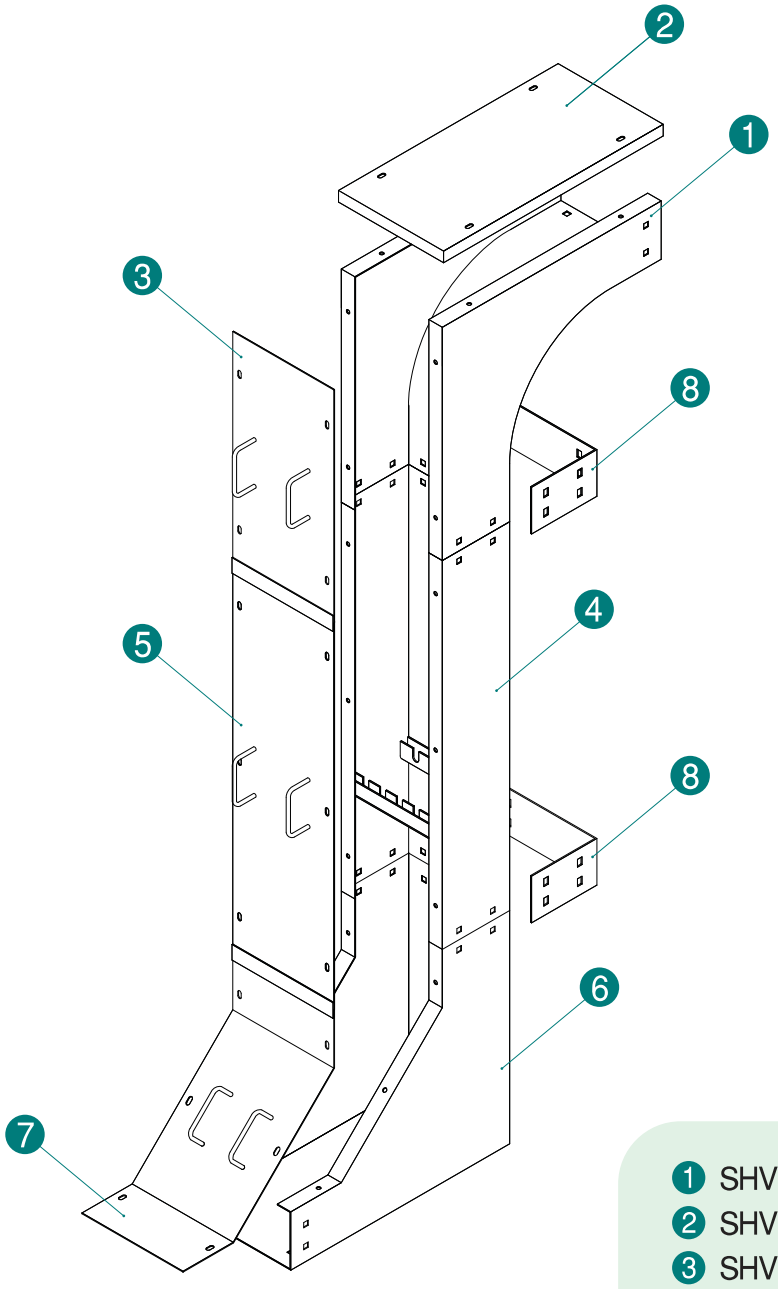

1. SHVO
2. SHVO - Cover
3. SHVO - Cover
4. SHST
5. SHST - Cover
6. SHVI
7. SHVI - Cover
8. SHJC

Specification Numbering

S H 1 – C S

- **SH1**
- **SH2**
- **SH3**

- **CS**-Carbon Steel
- **HGI**-Hot-dip Zinc-coated Steel
- **SUS**-Stainless Steel

Item Numbering

S H S 90 V O – 30 10 R 30

- **SH** : Shaft
- **L** : Ladder
- **S** : Solid
- **ST** : Straight
- **90VO** : 90° Vertical outside bend
- **90VI** : 90° Vertical inside bend
- Width
- Height
- **R30** : Radius 300mm
- **R40** : Radius 400mm
- **R60** : Radius 600mm
- **C30** : Square 300mm
- **C40** : Square 400mm
- **C60** : Square 600mm
- **L24** : Length 2400mm
- **L30** : Length 3000mm
- **L60** : Length 6000mm

Shaft Straight Tray

- Material : Carbon Steel
  Stainless Steel
  Hot–dip Zinc–coated Steel
- Fabrication : Electro ARC of CO2, TIG Welding or Argon Welding
- Finish : Hot Dip Galvanizing
  Acid Pickling after Fabrication
  Anodic Oxidation
  Paint
  Natural

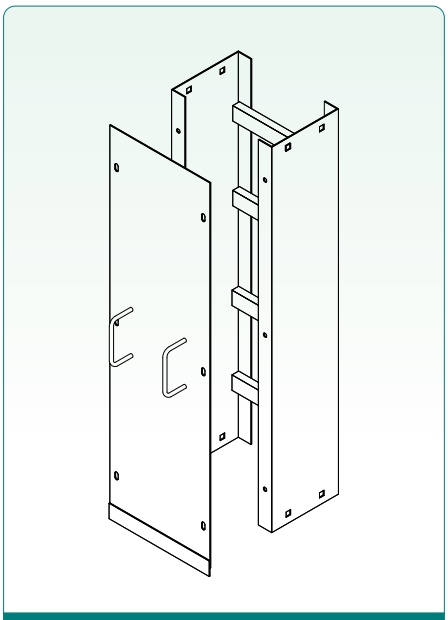

SH1

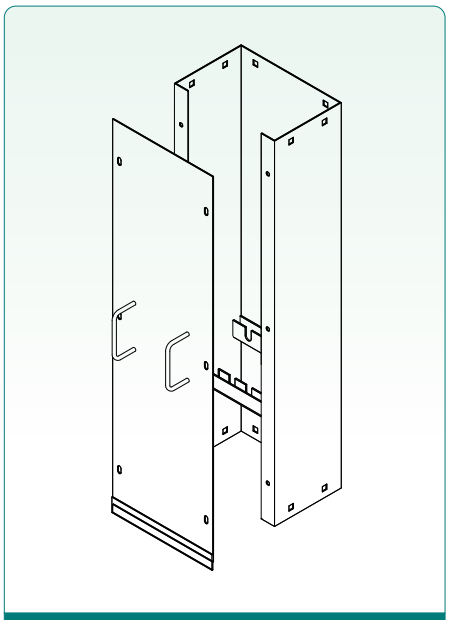

SH2

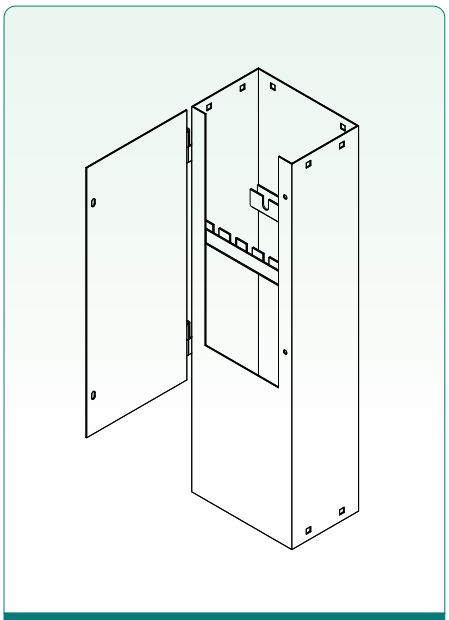

SH3

SHL90VO - 90˚ Vertical outside Bend & Cover

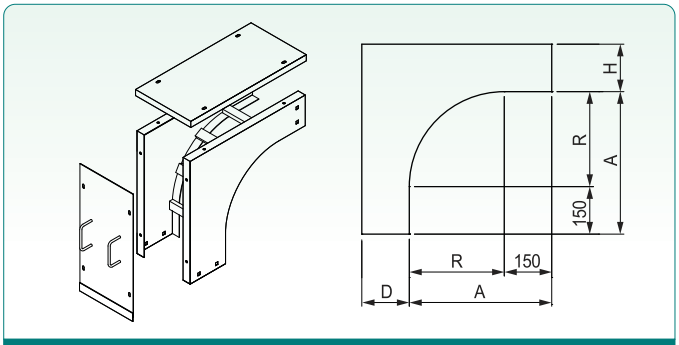

Ladder Type

SHS90VO - 90˚ Vertical outside Bend & Cover

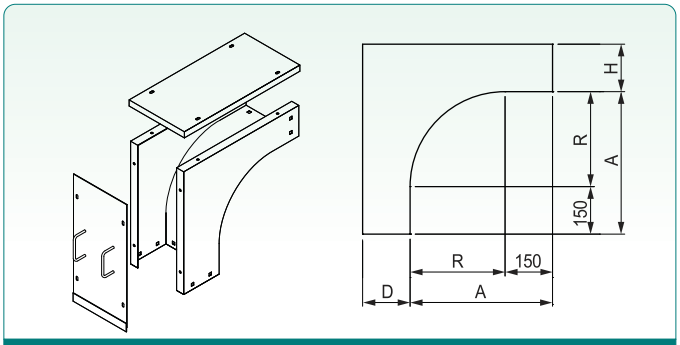

Solid Type

W	R	90˚ VO DIMENSION		Item No (Ladder Type)	Item No (Solid Type)
		A	D & H		
300	300	450	200	SHL90VO–3020R30	SHS90VO–3020R30
	600	750	200	SHL90VO–3020R60	SHS90VO–3020R60
600	300	450	200	SHL90VO–6020R30	SHS90VO–6020R30
	600	750	200	SHL90VO–6020R60	SHS90VO–6020R60
900	300	450	200	SHL90VO–9020R30	SHS90VO–9020R30
	600	750	200	SHL90VO–9020R60	SHS90VO–9020R60

SHL90VI - 90˚ Vertical inside Bend & Cover

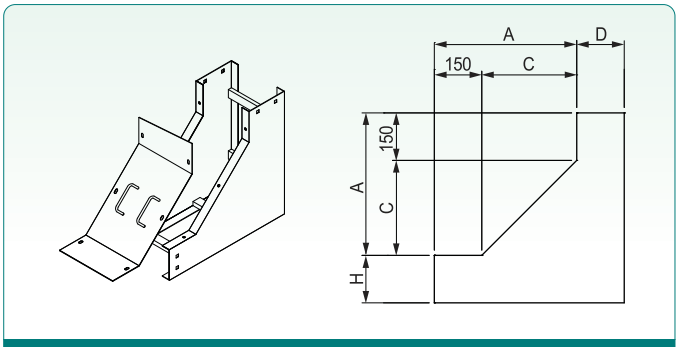

Ladder Type

SHS90VI - 90˚ Vertical inside Bend & Cover

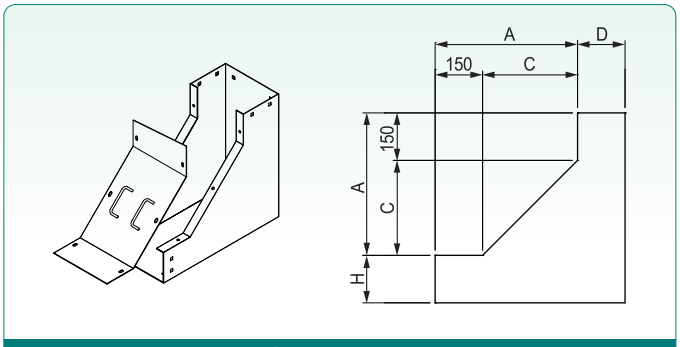

Solid Type

W	C	90˚ VI DIMENSION		Item No (Ladder Type)	Item No (Solid Type)
		A	D & H		
300	300	450	200	SHL90VI–3020C30	SHS90VI–3020C30
	600	750	200	SHL90VI–3020C60	SHS90VI–3020C60
600	300	450	200	SHL90VI–6020C30	SHS90VI–6020C30
	600	750	200	SHL90VI–6020C60	SHS90VI–6020C60
900	300	450	200	SHL90VI–9020C30	SHS90VI–9020C30
	600	750	200	SHL90VI–9020C60	SHS90VI–9020C60

Item Numbering

S H J C – 30 10

- SHJC: • Shaft Joint Connector
- 30: • Width
- 10: • Height

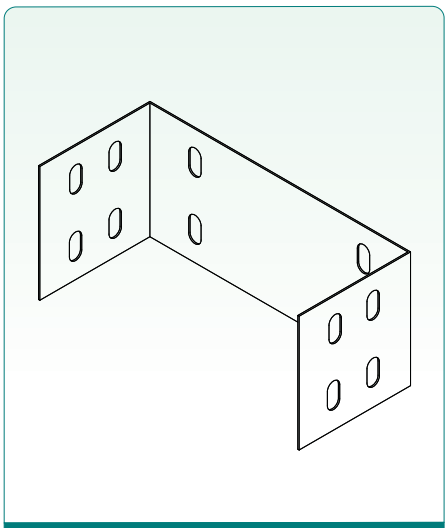

SHJC

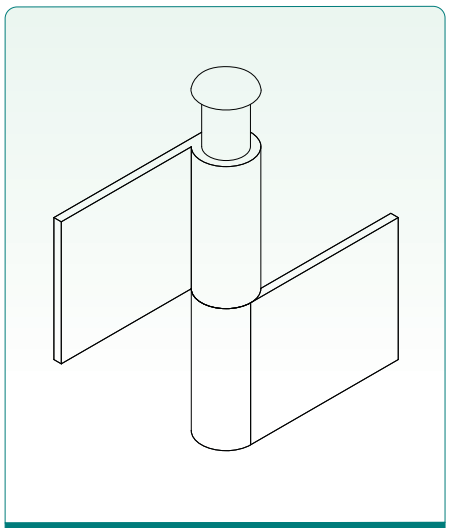

HIG

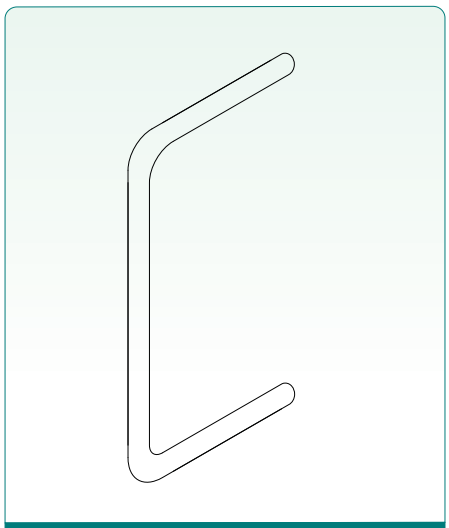

HIDE

■ Shaft Joint Connector

Catalog No	Depth(H)
SHJC–**10	100
SHJC–**15	150
SHJC–**20	200

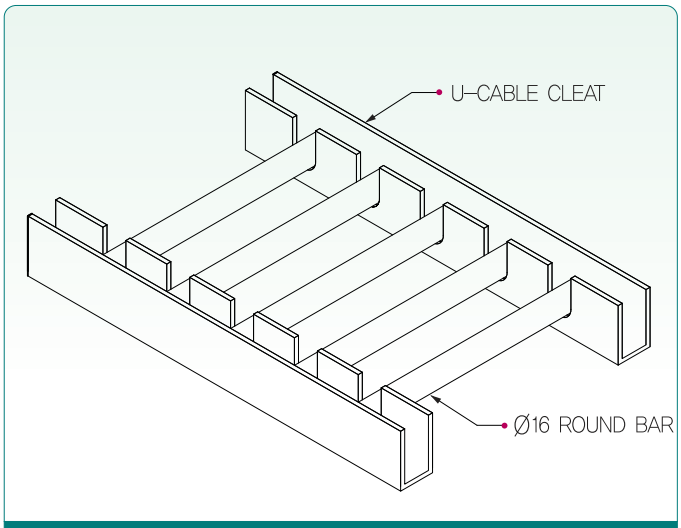

UCL

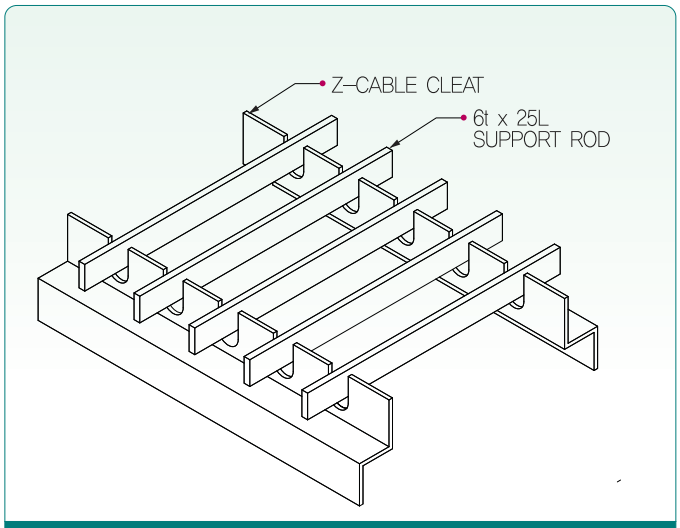

ZCL

■ U - Cable Cleat & Round Bar

Catalog No	Depth(H)
UCL–10	100
UCL–15	150
UCL–20	200

■ Z - Cable Cleat & Support Rod

Catalog No	Depth(H)
ZCL–10	100
ZCL–15	150
ZCL–20	200

7. RACEWAY

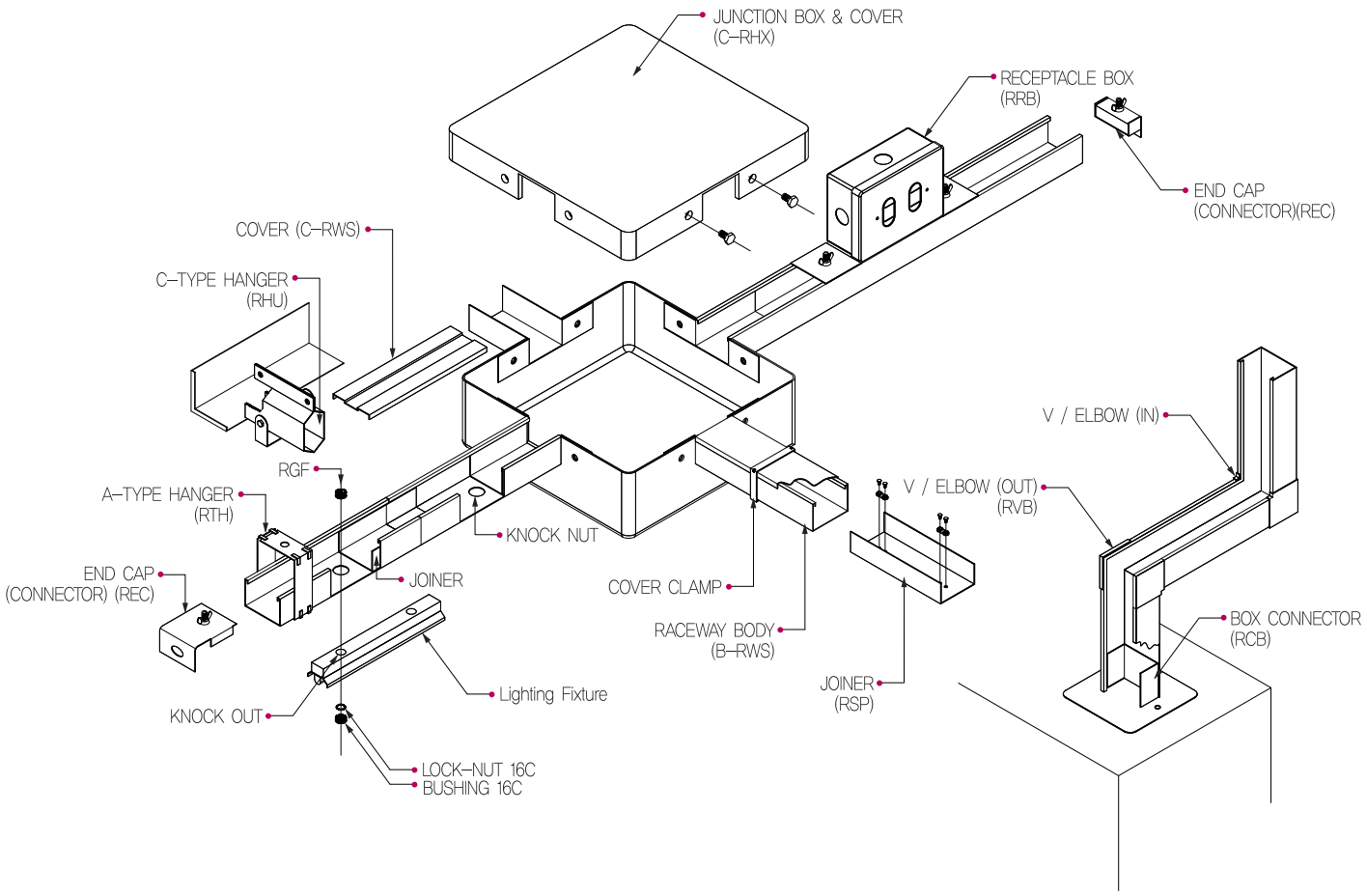
JUNCTION BOX & COVER
(C–RHX)
RECEPTACLE BOX
(RRB)
END CAP
(CONNECTOR)(REC)
COVER (C–RWS)
C–TYPE HANGER
(RHU)
V / ELBOW (IN)
RGF
A–TYPE HANGER
(RTH)
V / ELBOW (OUT)
(RVB)
KNOCK NUT
END CAP
(CONNECTOR) (REC)
JOINER
COVER CLAMP
BOX CONNECTOR
(RCB)
RACEWAY BODY
(B–RWS)
JOINER
(RSP)
Lighting Fixture
KNOCK OUT
LOCK–NUT 16C
BUSHING 16C

Specification Numbering

RW4 – CS

- **RW** : Race way
- **RW4**
- **RW7**
- **RW11**
- **RWC** : Race way Cover
- **RWC4**
- **RWC7**
- **RWC11**

- **CS**-Carbon Steel
- **EP**-Epoxy Electrostatic Painting Steel

Item Numbering

RHB – 4 1.9 L30

- **RS** : Race way straight
- **RHB** : Raceway Horizontal Bend
- **RVO** : Raceway Vertical Bend Outside
- **RVI** : Raceway Vertical Bend Inside
- **RHC1** : Raceway Horizontal Cross 1 type
- **RHC2** : Raceway Horizontal Cross 2 type
- **RHC3** : Raceway Horizontal Cross 3 type
- **RHC4** : Raceway Horizontal Cross 4 type

- Width
- Height

- **L24** : Length 2400mm
- **L30** : Length 3000mm

Body

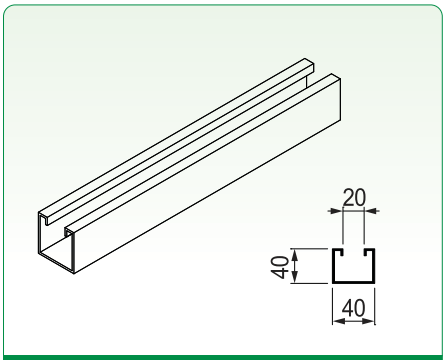

RW4

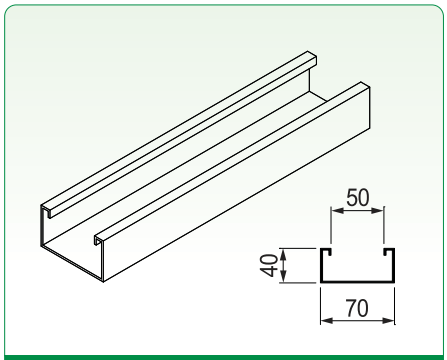

RW7

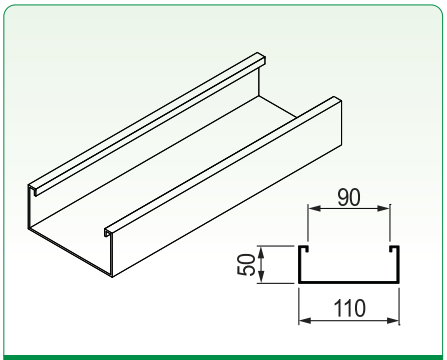

RW11

Cover

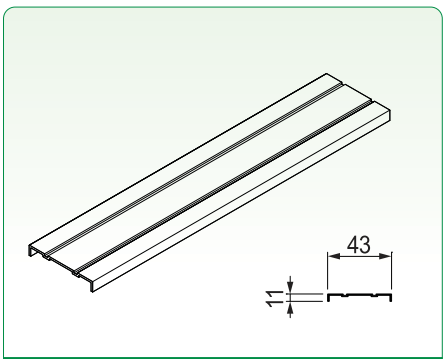

RWC4

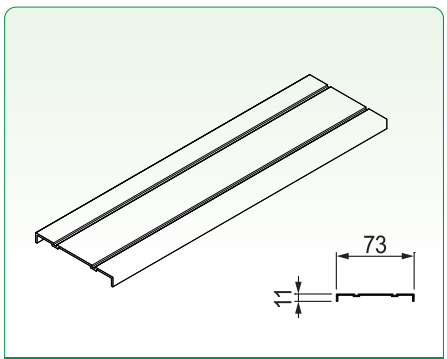

RWC7

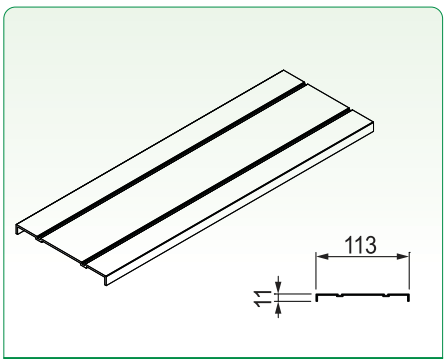

RWC11

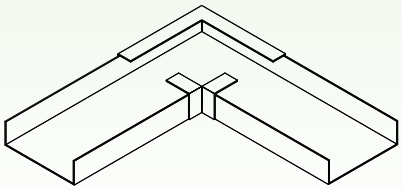

RHB-Raceway Horizontal Bend

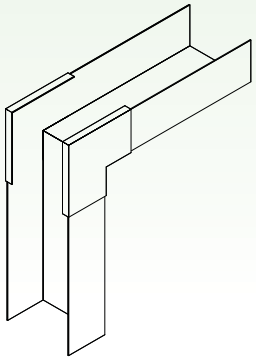

RVO-Raceway Vertical Outside Bend

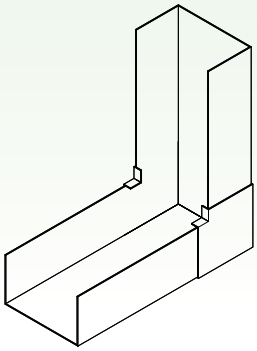

RVI-Raceway Vertical Inside Bend

Cross

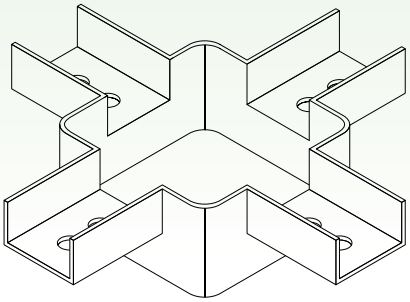

RHC4
Horizontal Cross 4 type

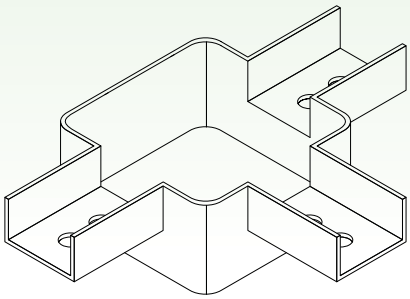

RHC3
Horizontal Cross 3 type

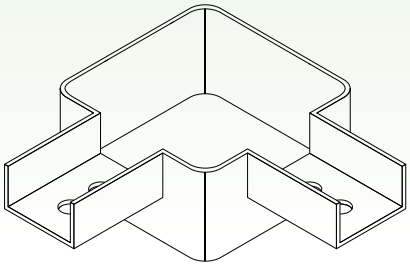

RHC2
Horizontal Cross 2 type

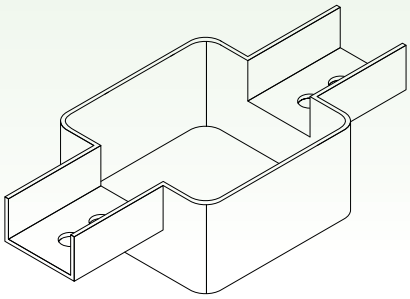

RHC1
Horizontal Cross 1 type

Splice Plate (Joiner)

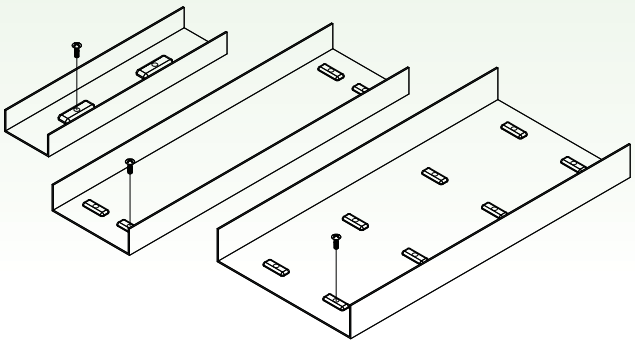

RSP
Raceway Splice Plate

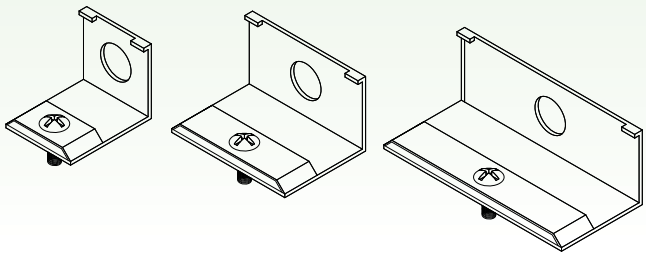

REC
Raceway End Cap

Fixture

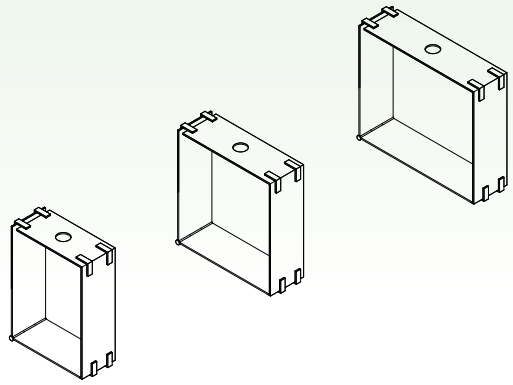

RTRH
Raceway Thread Rod Hanger

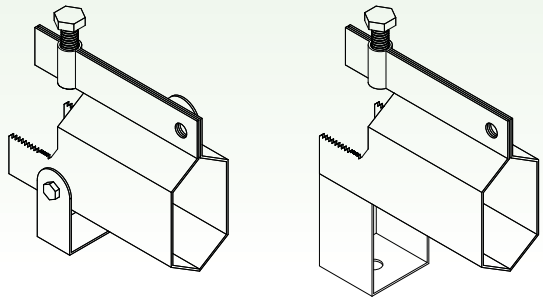

RTH
Raceway Truss Hanger(C-type)

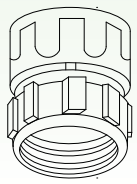

GLF
Gland Lighting Fixture

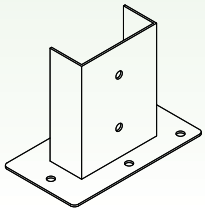

RCB
Raceway Connector Box

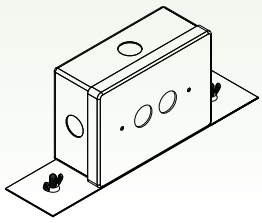

RRB
Raceway Receptacle Box

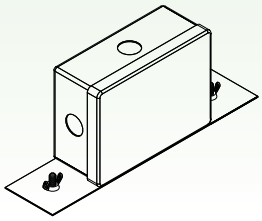

RJB
Raceway Joint Box

8. Tubing Raceway

TUBING RACEWAY a support system consisting of 5 sizes of small channel sections to house groups or single runs of tubing for instrumentation in petro-chemical plants, power houses, sewerage and water treatment facilities, etc. TUBING RACEWAY is available in 1.6t pre-galvanized steel and aluminum. Sections available with holes ordering TUBING CONNECTOR-FITTINGS which that holes tubes in the RACEWAY by simple thumb pressure.

Specification Numbering

TV - PG

- **TV** : Tubing Race way Ventilated
- **TN** : Tubing Race way Non ventilated
- **PP** : Punched plate
- **TPC** : Tubing Push Clamping Cover

- **PG**-Pre Galvanized Steel
- **EP**-Epoxy Electrostatic Painting Steel

Item Numbering

TR ST – 2.5 1.9 L30

- Tubing Race way
- **ST** : Straight
- **HB** : Horizontal Bend
- **HT** : Horizontal Tee
- **HC** : Horizontal Cross
- **VO** : Vertical Outside Bend
- **AVC** : ADJ. Vertical Connector
- **AHC** : ADJ. Horizontal Connector
- **JC** : Straight Connector
- Width
- Height
- **L24** : Length 2400mm
- **L30** : Length 3000mm

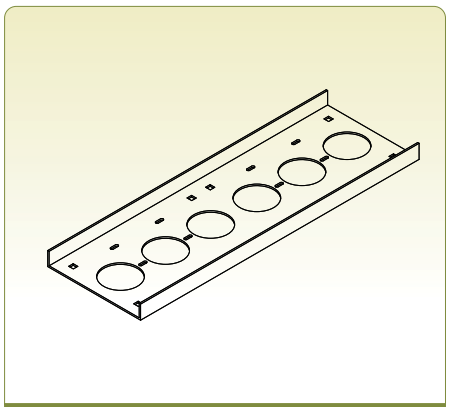

TV-Ventilated

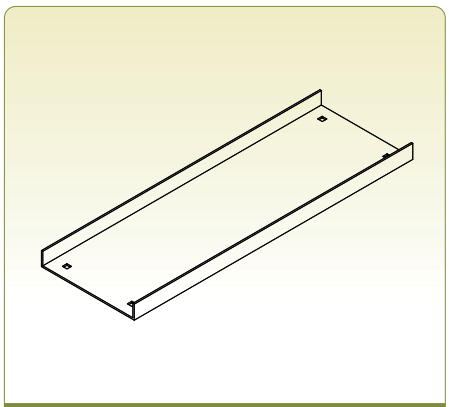

TN-Non-Ventilated

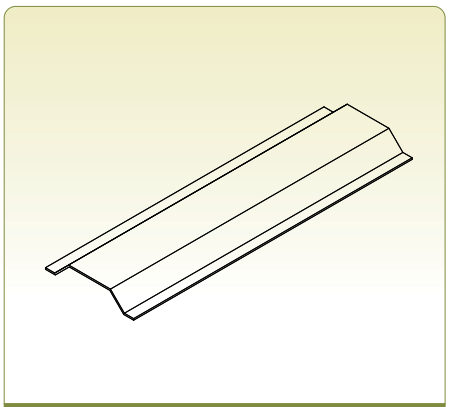

TPC-Tubing Push Clamping Cover

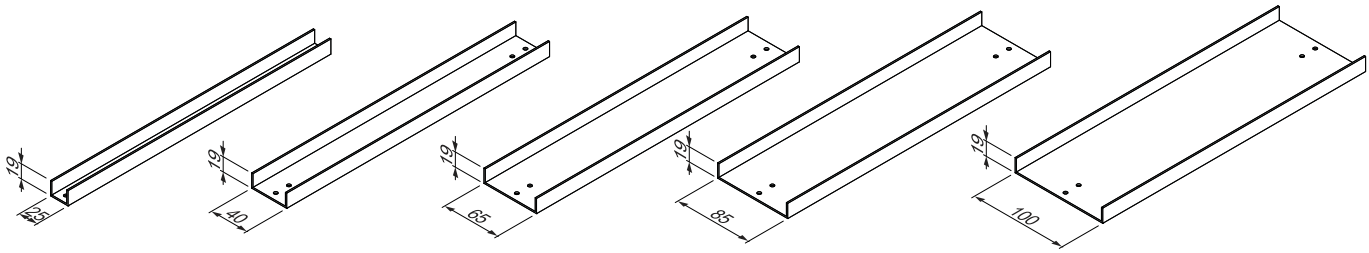

TR25 **TR40** **TR65** **TR85** **TR100**

Fittings

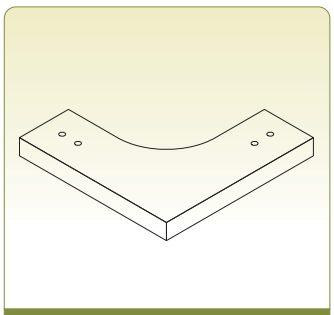

HB-Horizontal Bend

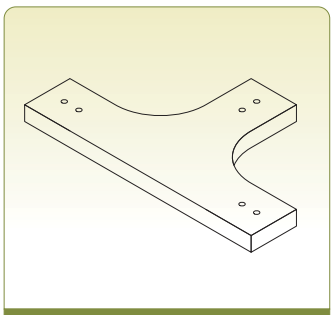

HT-Horizontal Tee Bend

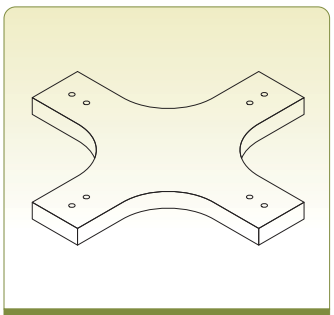

HC-Horizontal Cross Bend

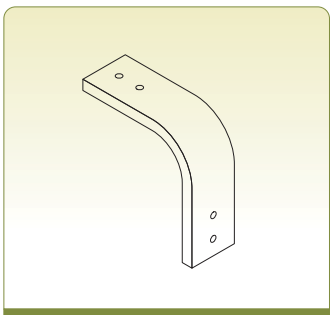

VO- Vertical Outside Bend

Accessories

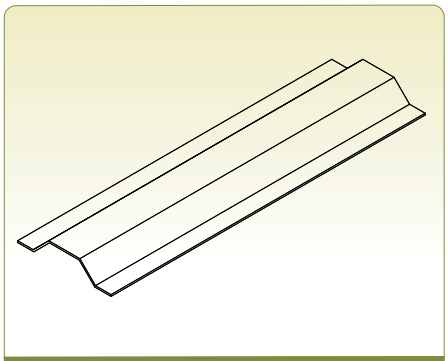

PC-(*) Push Clamp

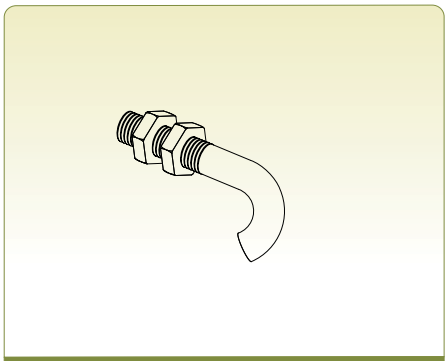

JBN-(*) J-Bolt & Nut

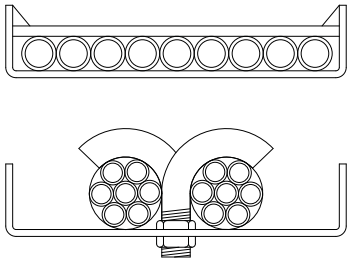

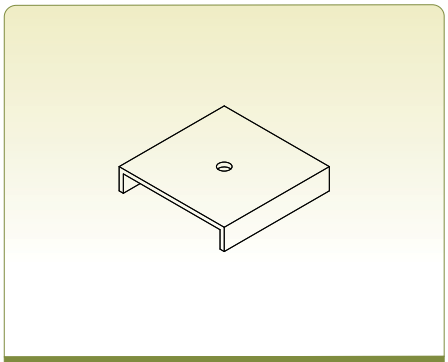

BDC-(*) Bolt Down Clamp

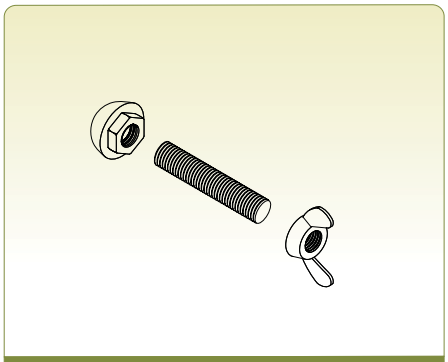

TBN-(*) Tubing Bolt & Net

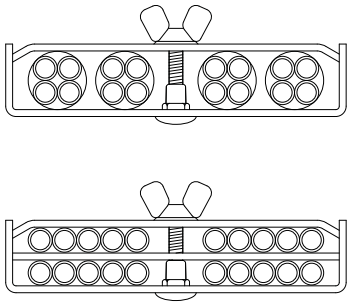

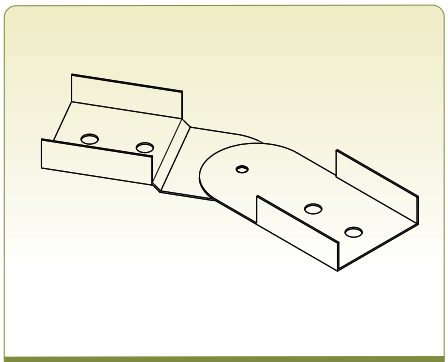

AVC-Tubing Raceway ADJ. Vertical Connector

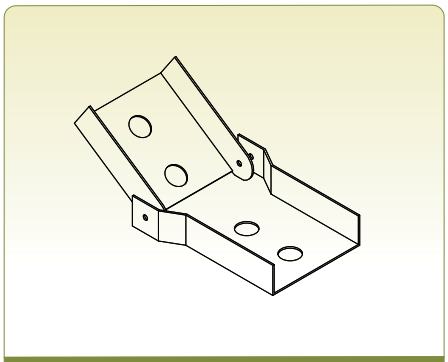

AHC-Tubing Raceway ADJ. Horizontal Connector

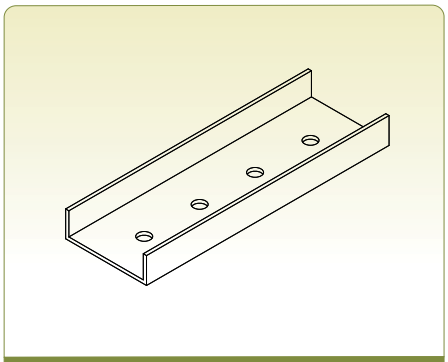

JC-Tubing Raceway Joint Connector

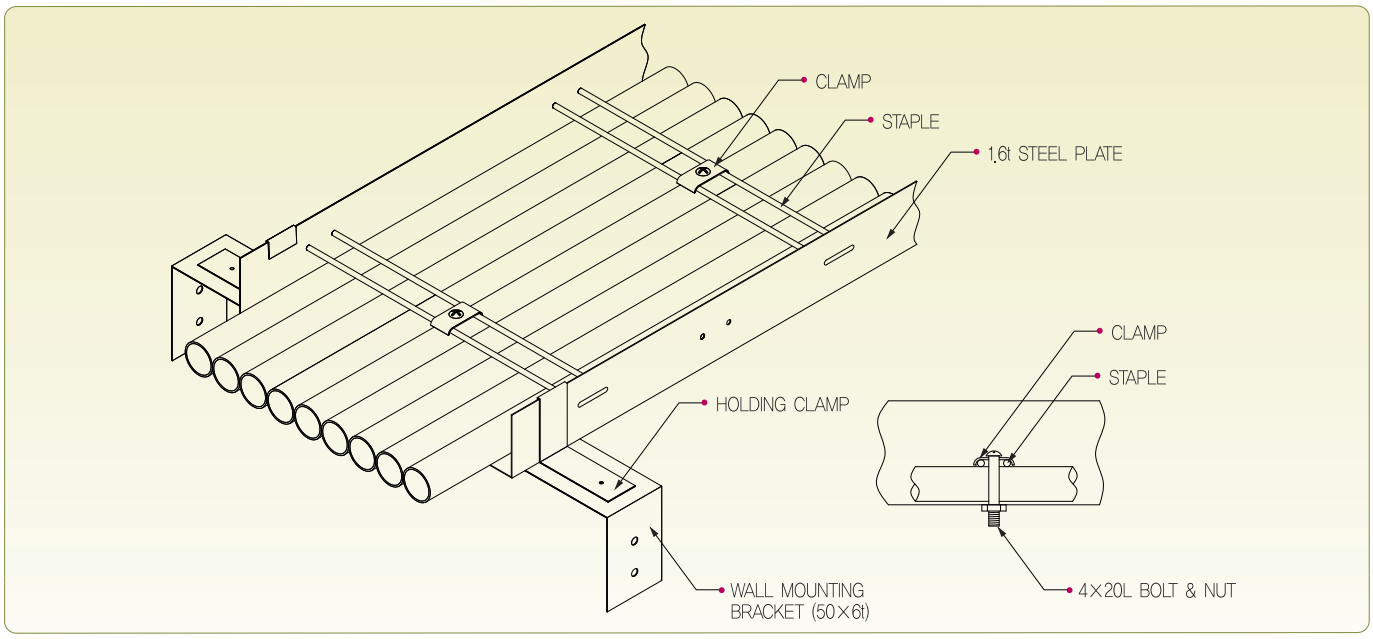

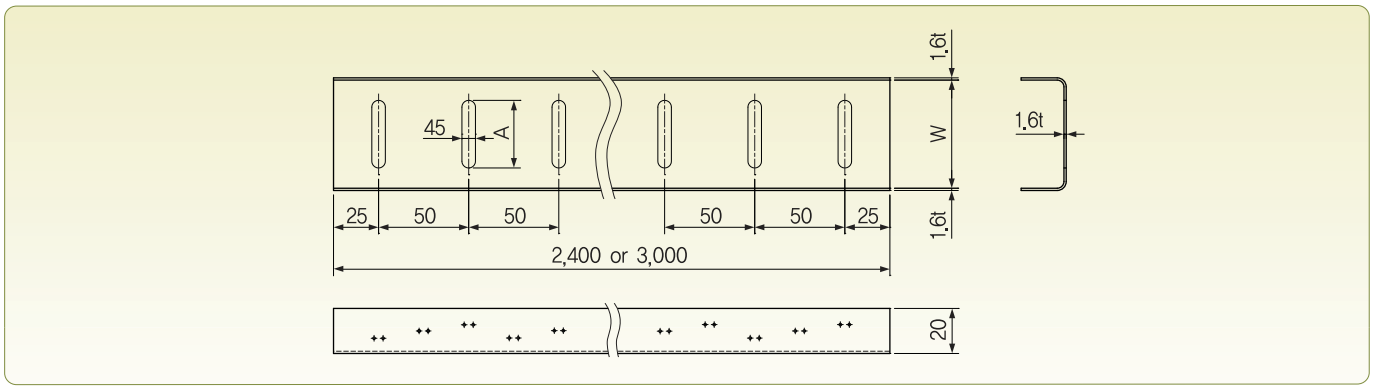

W	PUNCHING PLATE		STAPLE	
	Item No.	A	Item No.	B
35	PP–35	27	PPS–35	60
50	PP–50	42	PPS–50	75
70	PP–70	62	PPS–70	95
100	PP–100	92	PPS–100	125
150	PP–150	130	PPS–150	175

- **MATERIAL** : JIS G 3101 SS400 STEEL
- **STANDARD LENGTH** : 2.4m or 3.0m
- **FINISHES** : Hot Dip Galvanized After Fabrication in Accordance with ASTM-A-386

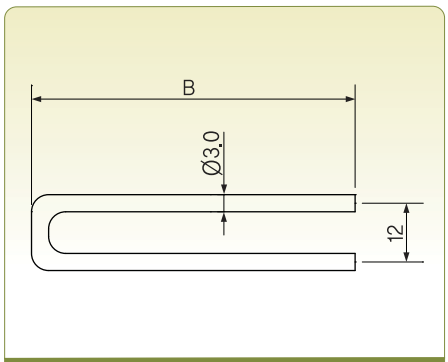

PPS-Staple

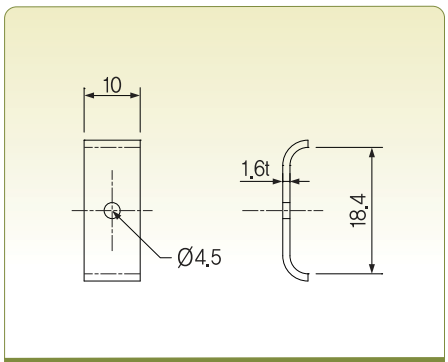

PPC-Clamp

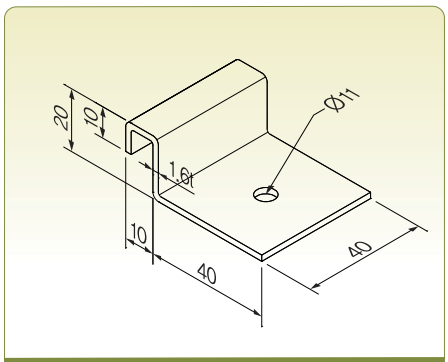

PPFC-Fixing Clamp

U-CHANNEL, BRACKET

9. SUPPORT

U-Channel Straight Section Part Numbering

C S 40 30 – 2.6 – L 30

- **U-channel Type** : CS4030, CD4030, CS4120, CD4120, CS4125, CD4125, CS4141, CD4141
- **Thickness**
- **Size**
  - **L30** : Length 3000mm
  - **L60** : Length 6000mml

Single

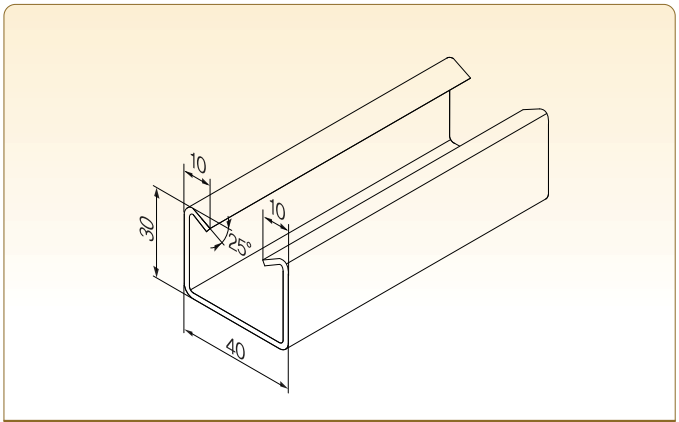

CS4030

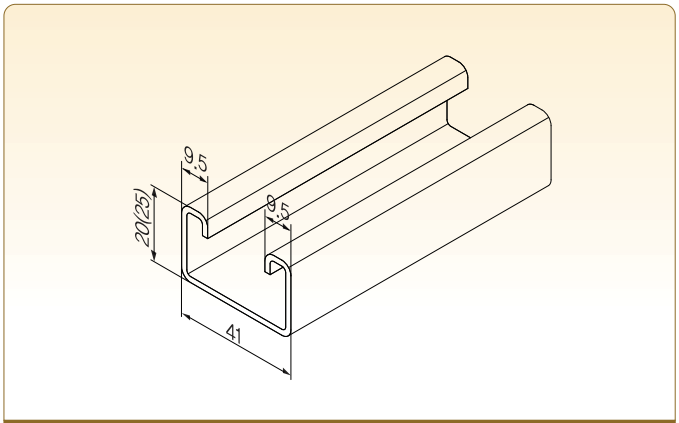

CS4120(4125)

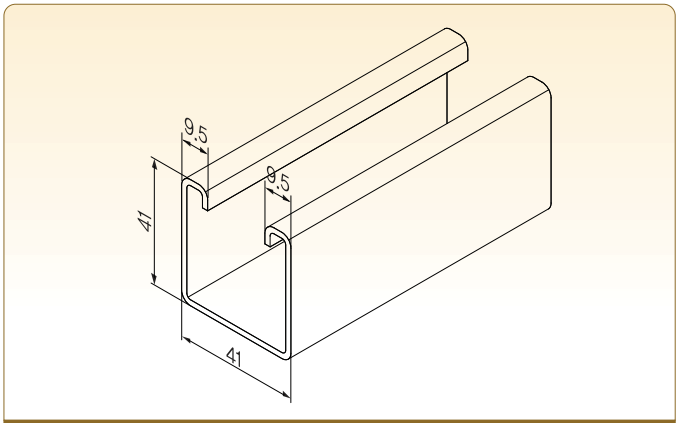

CS4141

Double

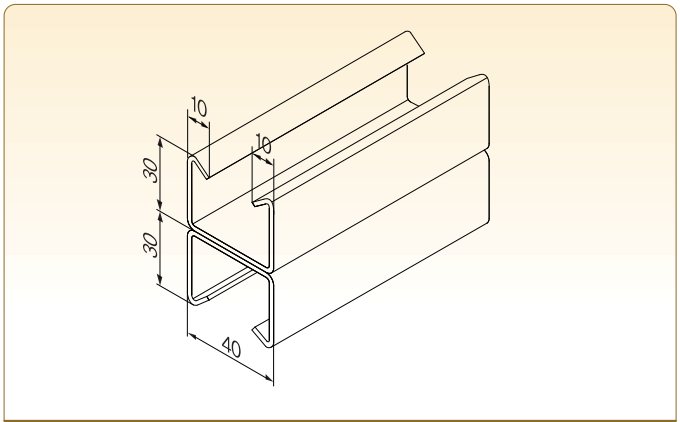

CD4030

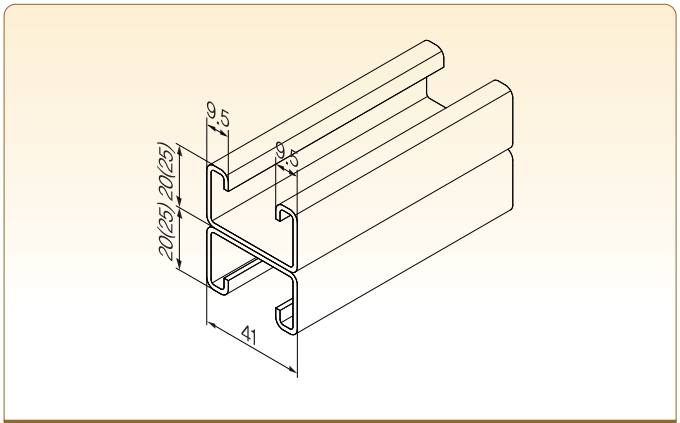

CS4120(4125)

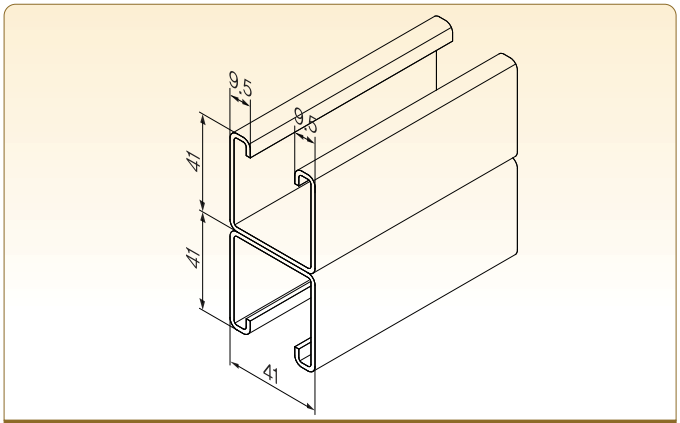

CD4141

Channel with Knockouts

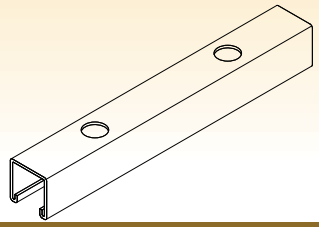

CK-(*)-(**)

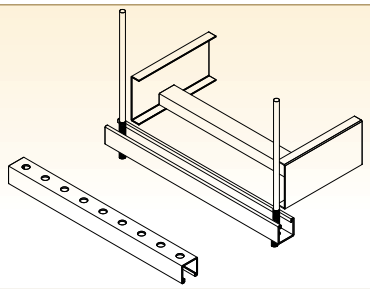

Channel with Holes

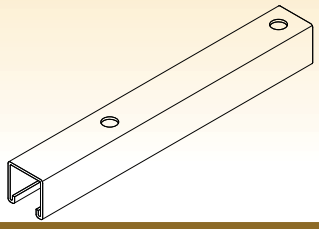

CHA-(*)-(**)

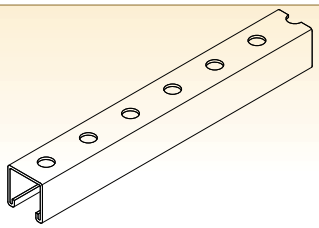

CHB-(*)-(**)

Channel with Slots

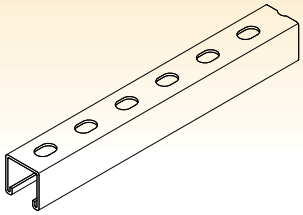

CSA-(*)-(**)

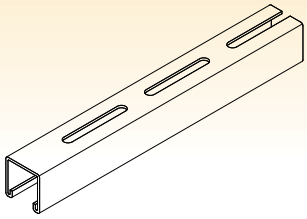

CSB-(*)-(**)

Concrete Insert

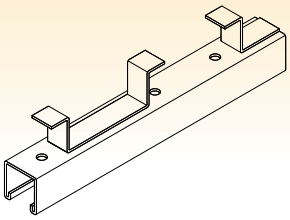

CCI-(*)-(**)

Closure Strip

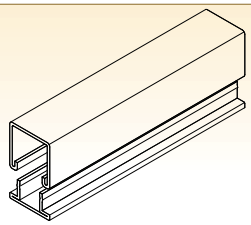

CS-(*)

End Cap

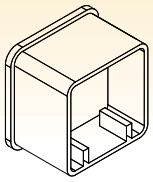

EC-(*)

Anchor Cap

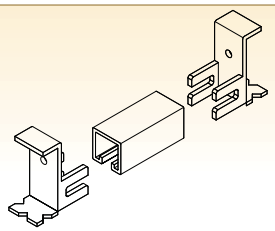

AC-(*)

Single Channel Brackets

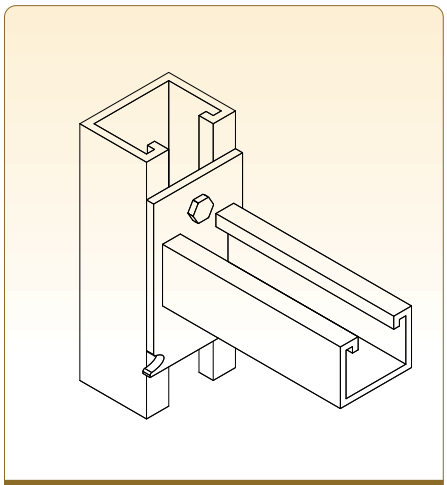

B-101

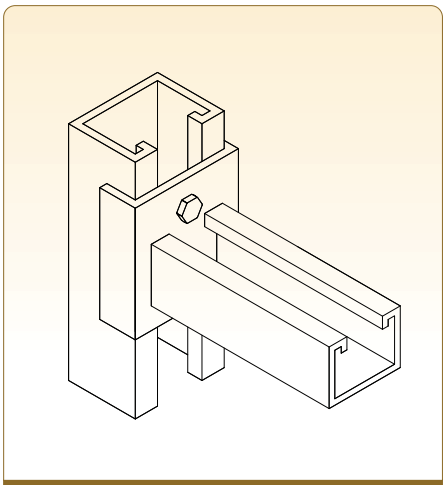

B-102

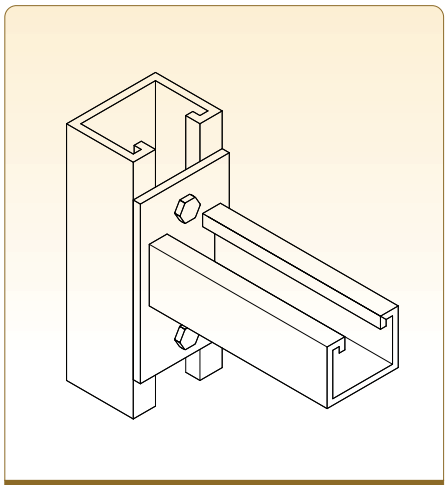

B-201

Bracket for Channel

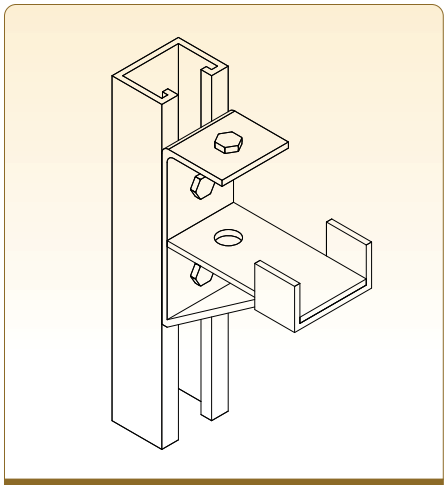

B-301

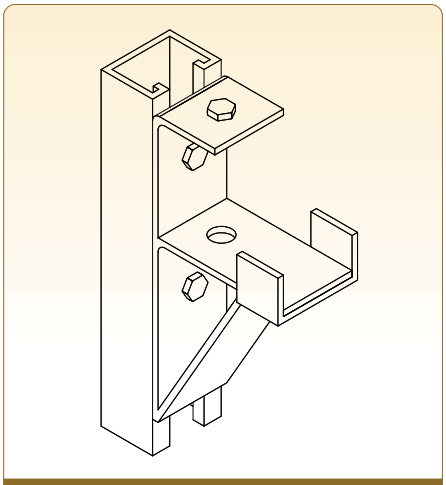

B-302

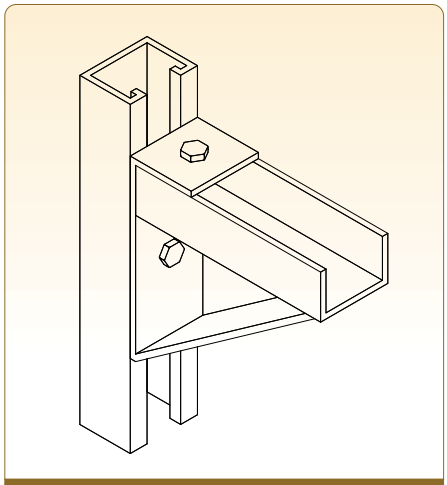

B-303

Cable Saddle Bracket

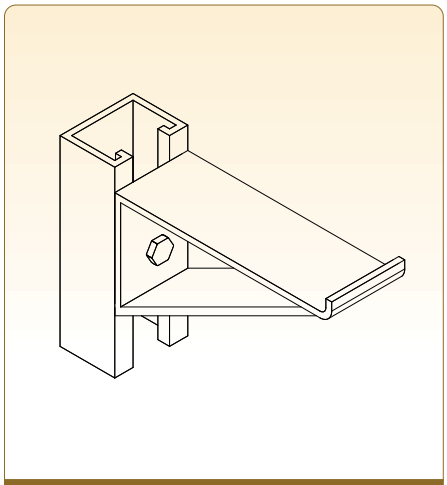

B-401

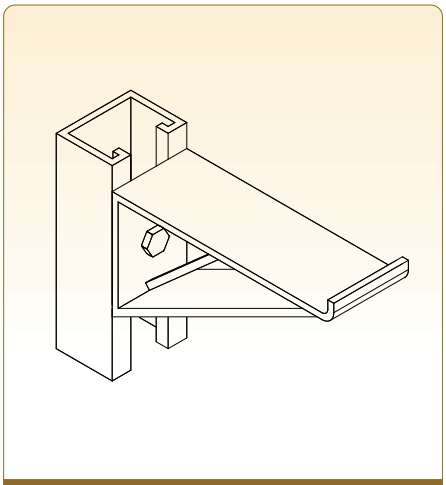

B-402

Double Channel Bracket

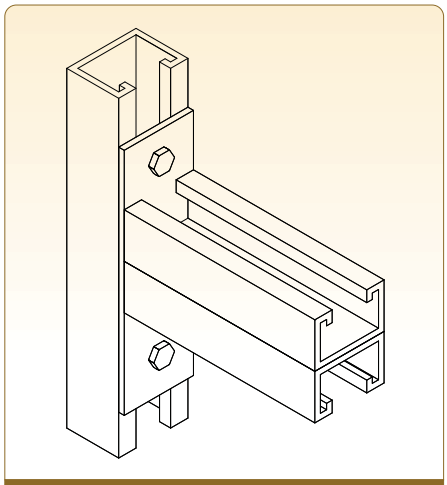

B-501

Slotted Shelf Bracket

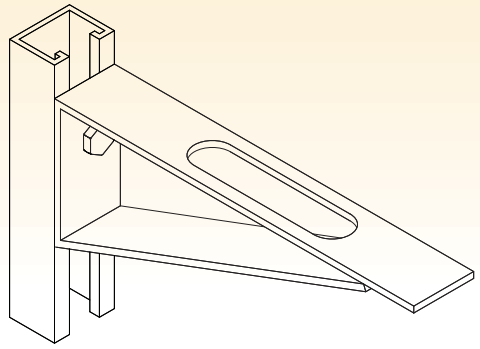

B-601

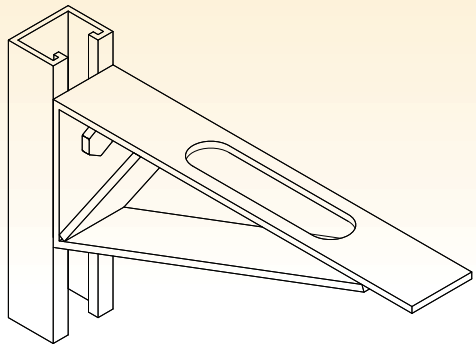

B-602

Welded Brace Shelf Bracket

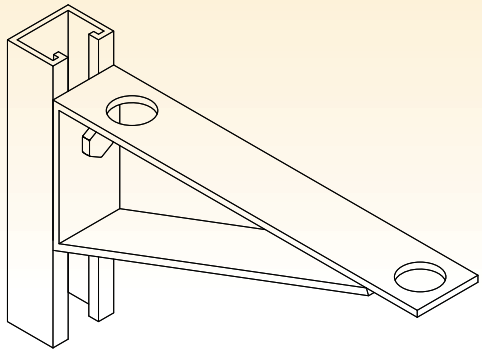

B-701

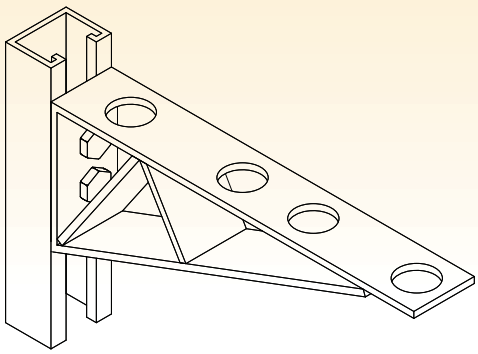

B-702

Cable Tray Bracket

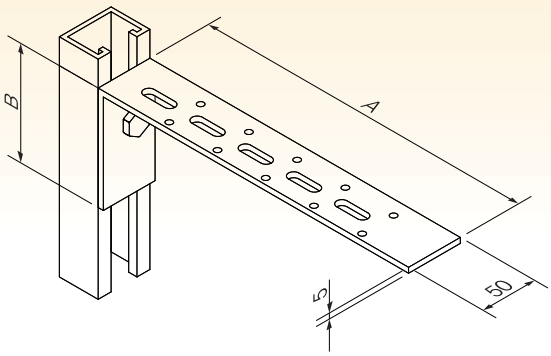

Item No	A	B
B–801	150	50
B–802	200	60
B–803	250	75
B–804	300	85
B–805	350	100
B–806	400	115
B–807	450	125
B–808	500	140
B–809	550	150
B–810	600	160
B–811	700	175
B–812	750	190

Square Washer

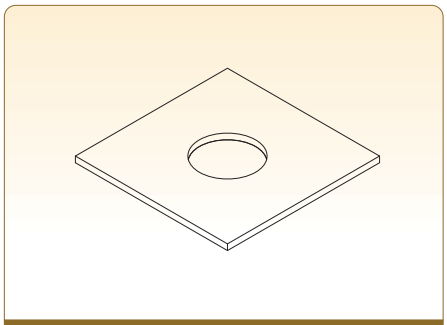

F-101

2-Hole Swivel Plate

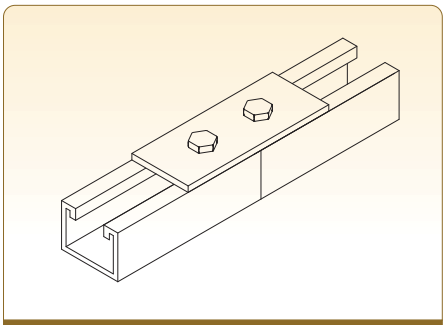

F-201

2-Hole Splice Plate

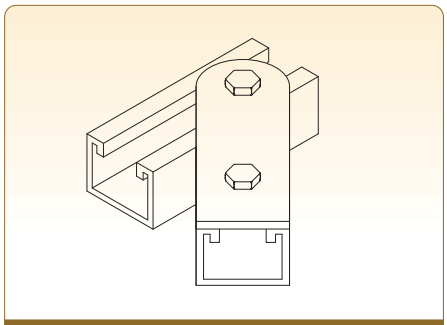

F-202

3-Hole Splice Plate

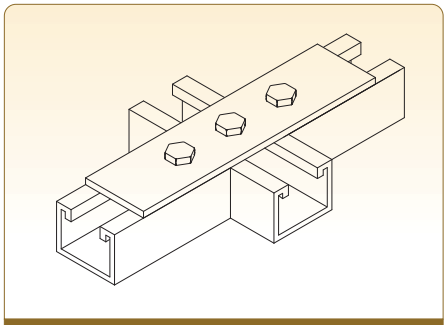

F-301

3-Hole Swivel Plate

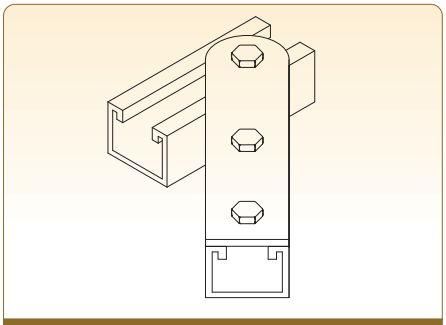

F-302

4-Hole Splice Plate

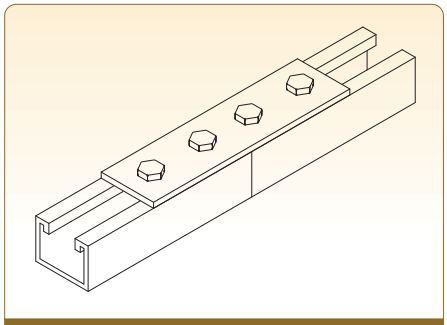

F-401

3-Hole Flat Plate Conn.

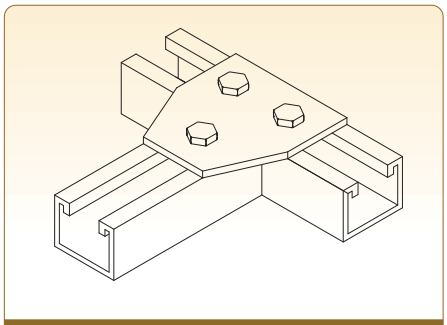

F-303

3-Hole Shelf Frame Conn.

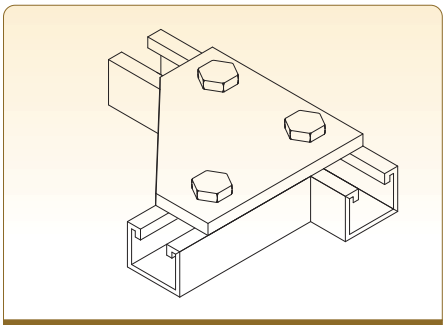

F-304

4-Hole Corner Conn.

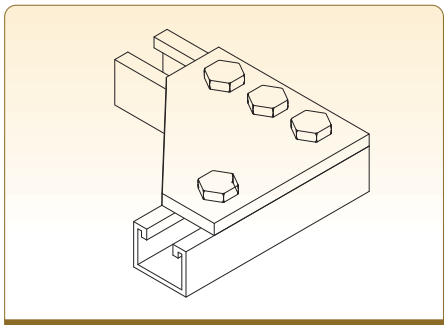

F-402

4-Hole Corner Joint Conn.

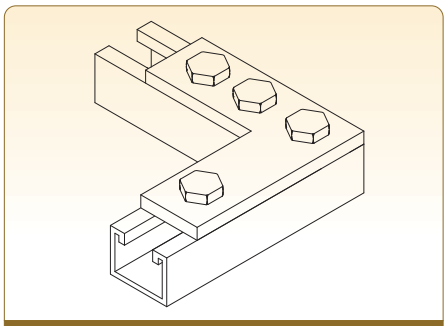

F-403

4-Hole Tee Conn.

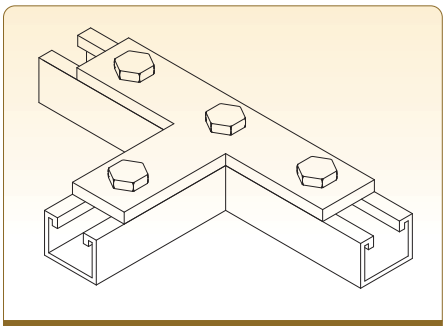

F-404

5-Hole Cross Plate Conn.

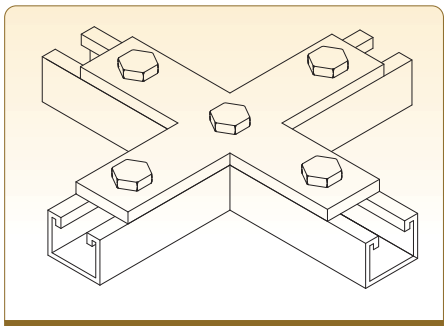

F-501

2-Hole Corner Conn.

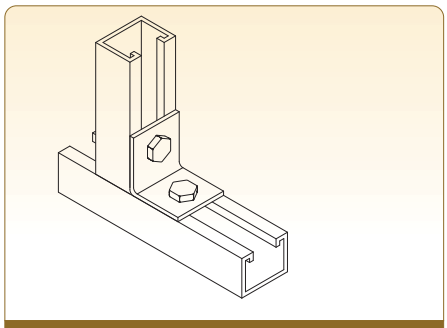

N-201

2-Hole 90˚ Rtting

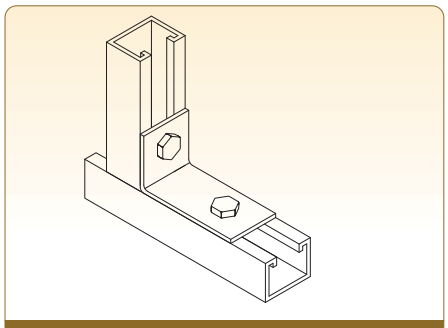

N-202

3-Hole 90˚ Rtting

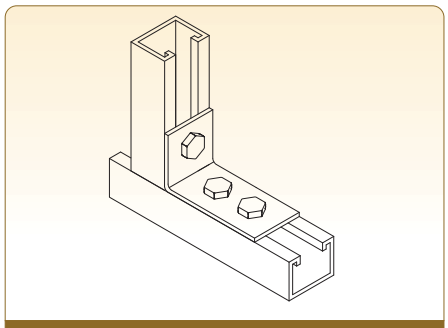

N-301

4-Hole Angle

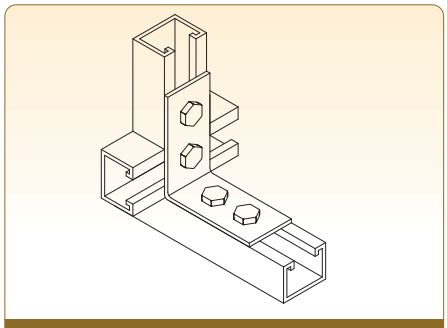

N-401

Adjustment Angel

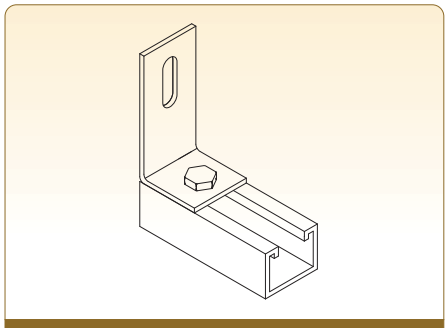

N-203

Slotted Angle Conn.

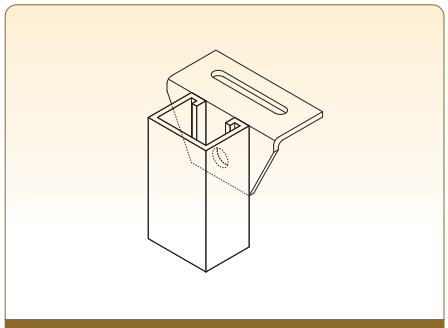

N-204

4-Hole 90˚ Offset Angle

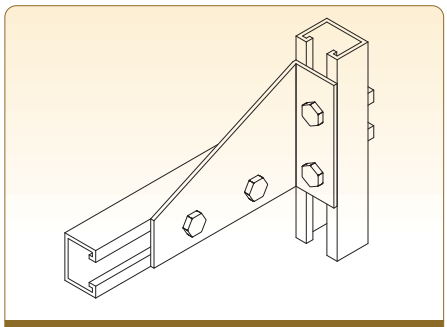

N-402

5-Hole Duplex Corner Angle

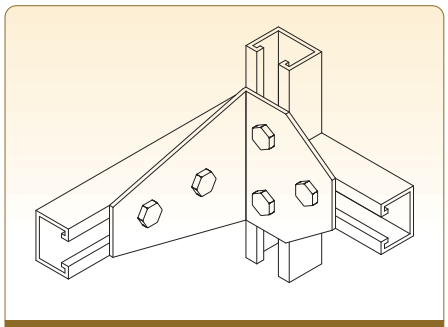

N-501

Adjustable Double Strut Surport

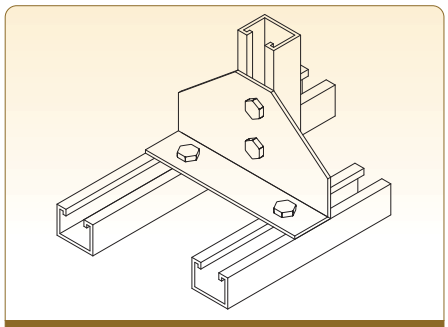

N-403

90˚ Angle Conn.

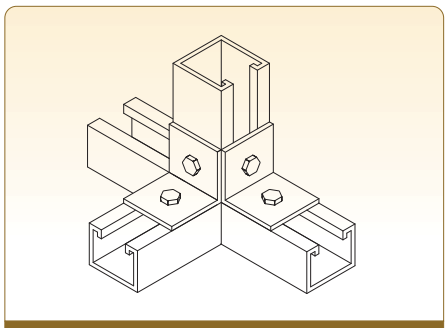

N-404

4-Hole Self Bracket

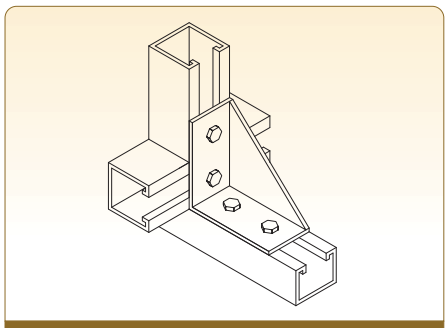

N-405

R & L Gusseted Coner Conn.

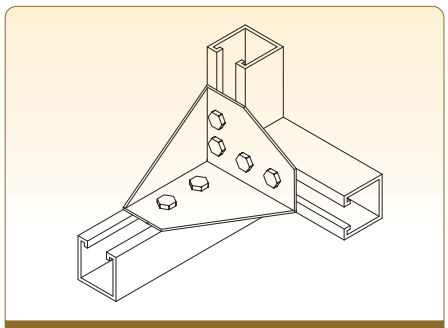

N-601

Support Splice Clevis

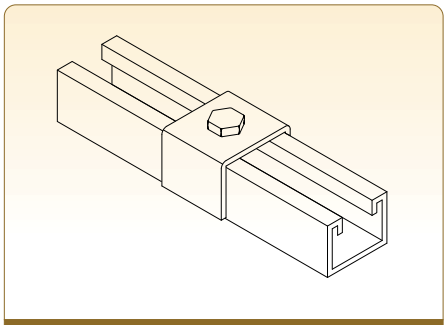

U-101

Channel Splice Plate

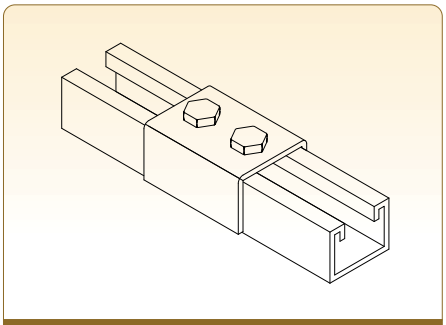

U-201

Splice Plate Clevis

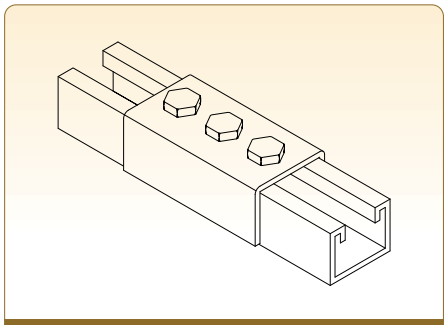

U-301

Splice Plate

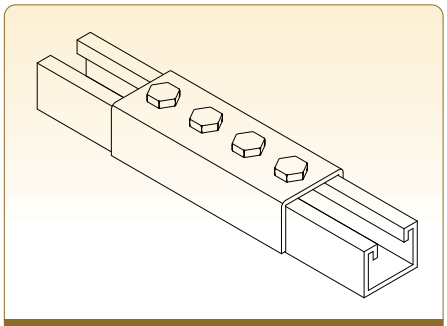

U-401

Strut Suspension Member

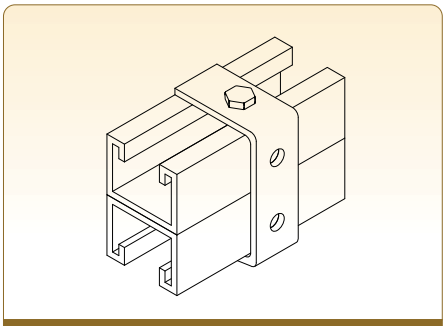

U-402

Buss Duct Conn. Clevis

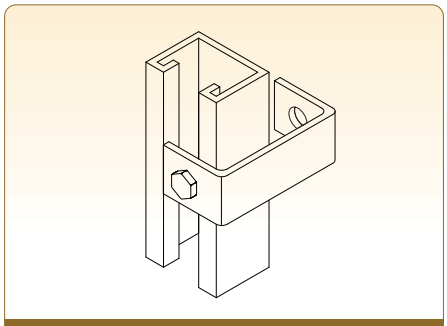

U-202

Cup Support

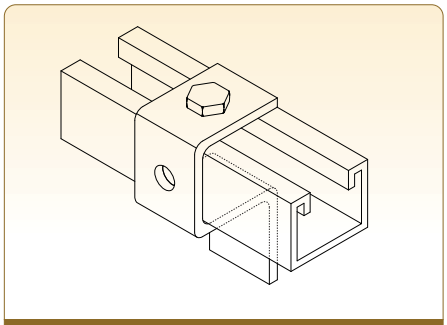

U-302

U-Support

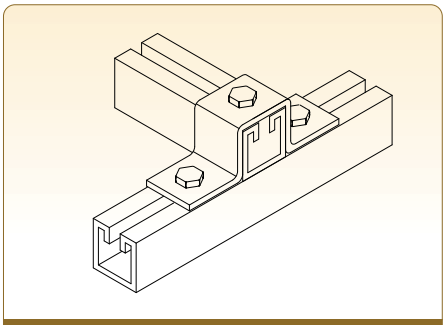

U-303

U-Clevis

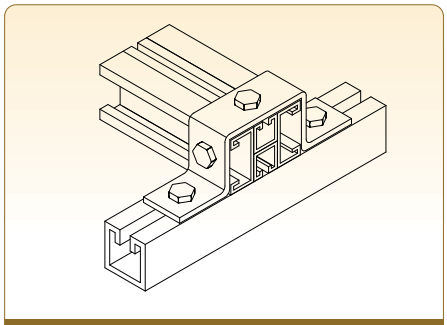

U-501

Beam Clamp Suspension Member

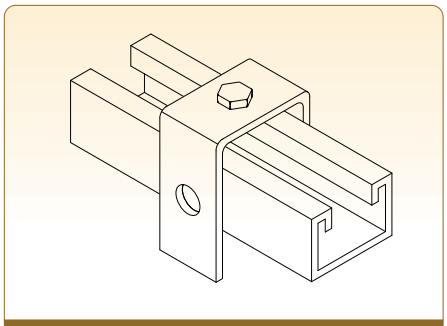

N-304

Slotted U-Support

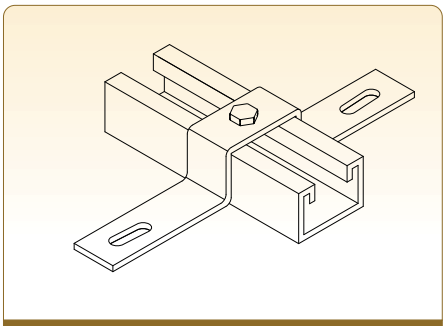

U-305

Wall Ladder Bracket

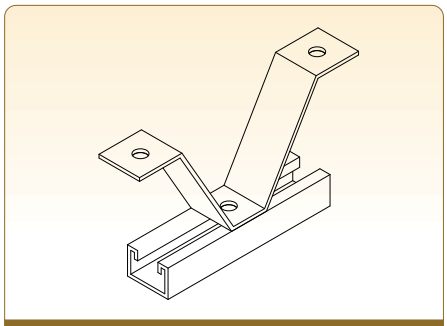

U-306

Offset Conn.

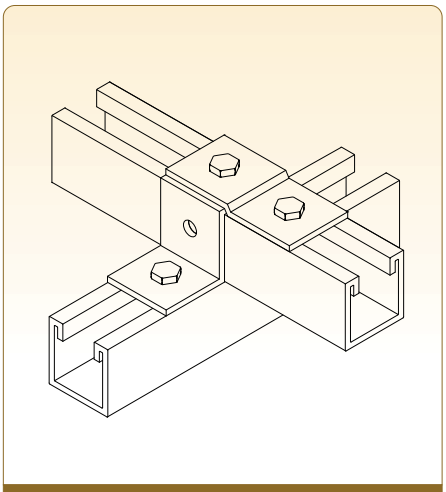

Z-201

2-Hole Zee Angle

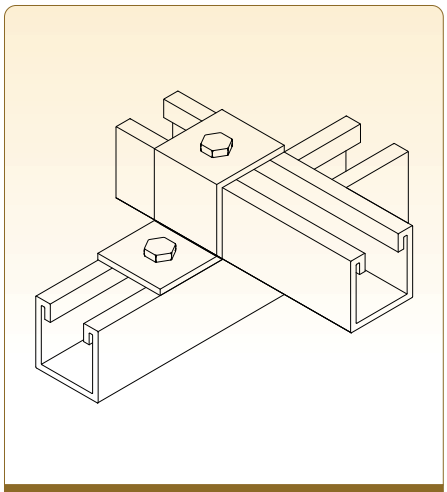

Z-202

3-Hole Zee Angle

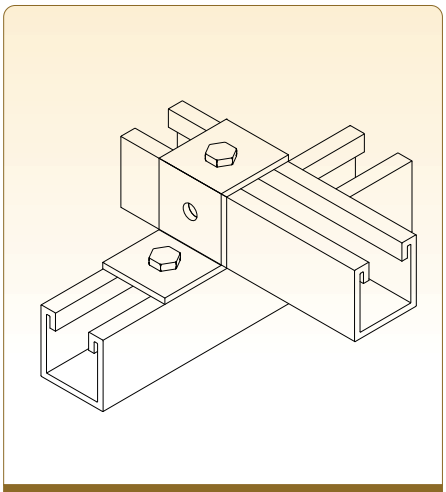

Z-301

2-Hole Offset Zee Angle

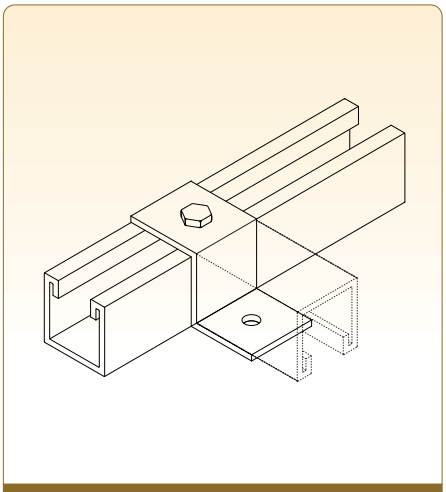

Z-203

3-Hole Offset Zee Angle

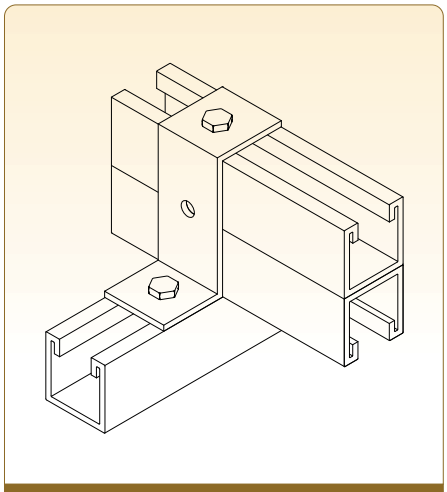

Z-302

2-Hole Zee Angle Clamp

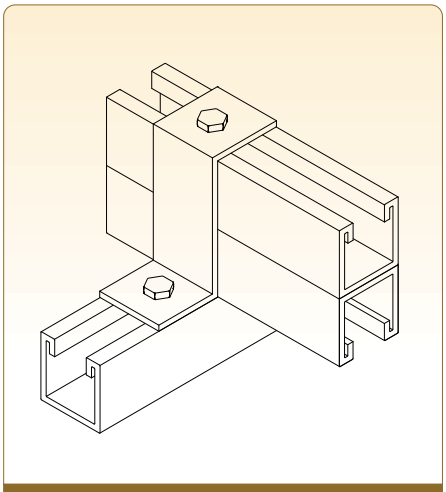

Z-204

Adj. Offset Angle

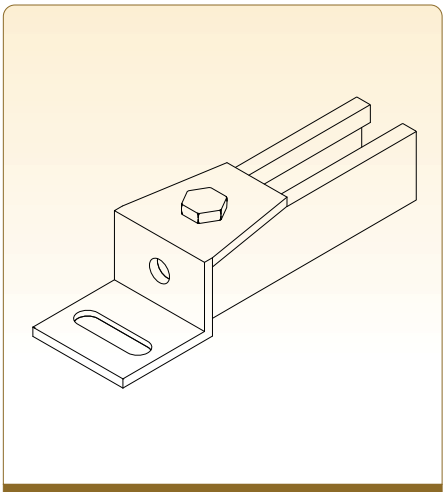

Z-303

Bus Duct Conn.

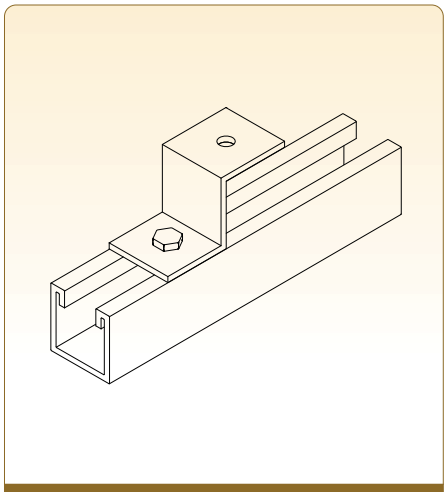

Z-205

Sheath Attach Corner Conn.

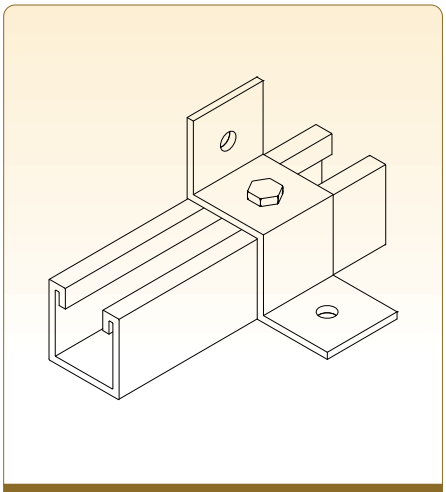

Z-304

2-Hole Angle Conn.

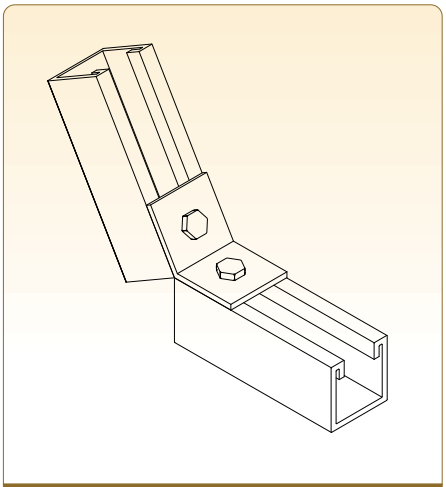

A-101

Angular Fitting

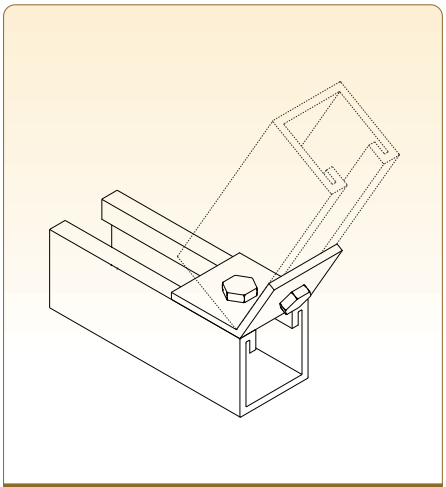

A-102

4-Hole Angle Conn.

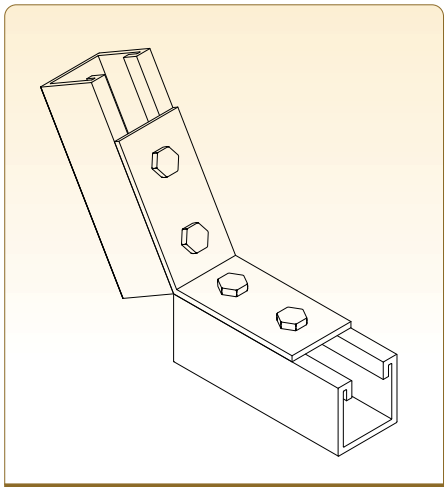

A-401

2-Hole Closed 45˚ Angle

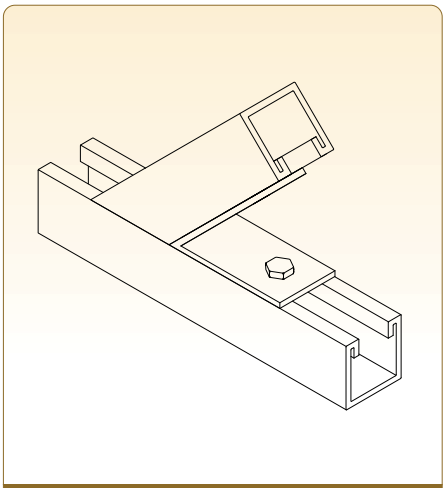

A-103

2-Hole Closed Angle

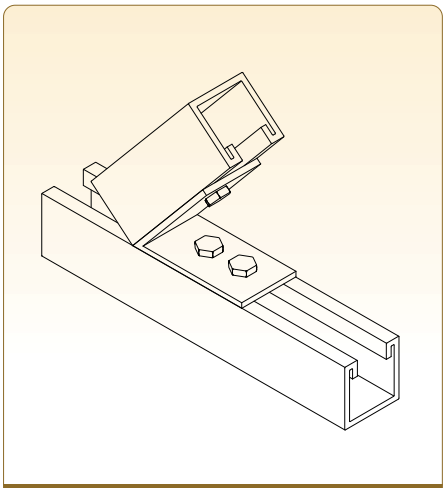

A-402

Stair Support

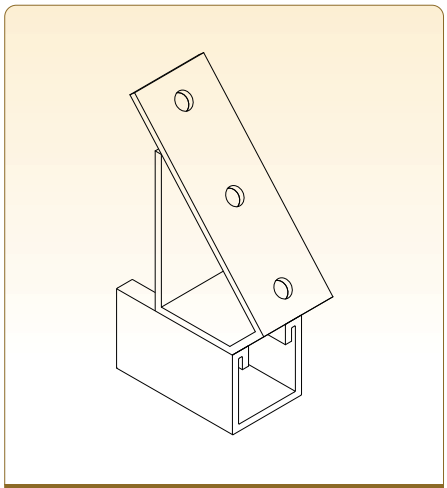

A-501

Support Bracket

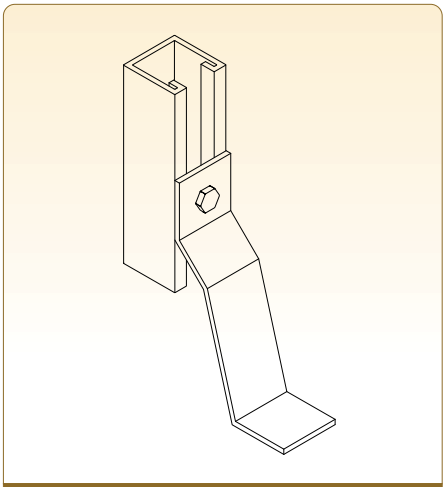

SB-101

Coupling Fitting

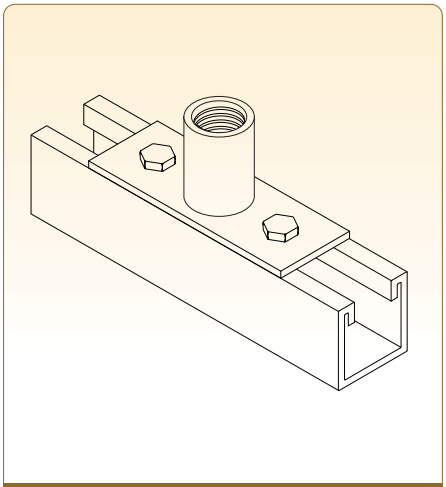

CF-201

Knee Brace

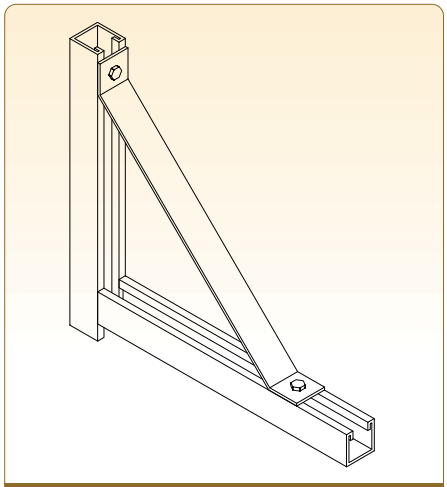

KB-201

4-Hole Single Angle Clevis

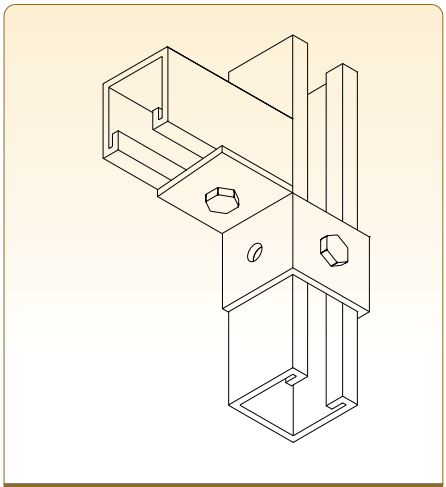

W-401

4-Hole Double Corner Angle

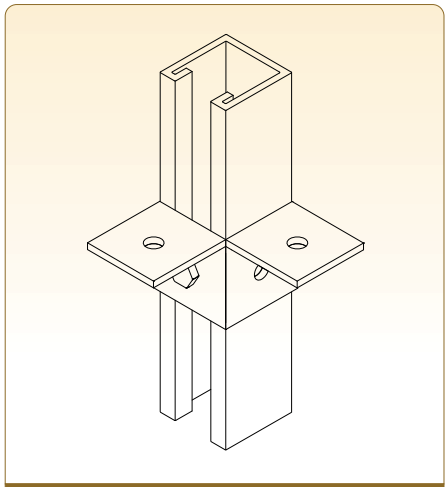

W-402

5-Hole Clevis Conn.

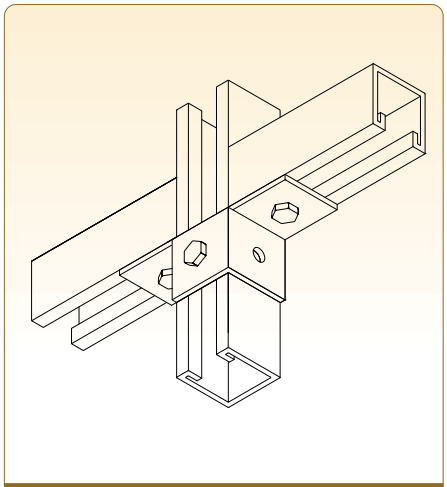

W-501

R & A 5-Hole Clevis Conn.

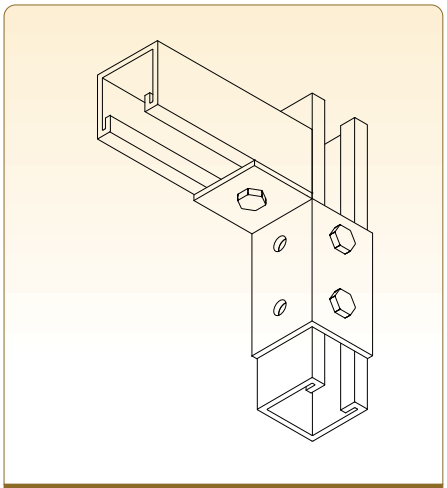

W-502

6-Hole Clevis Conn.

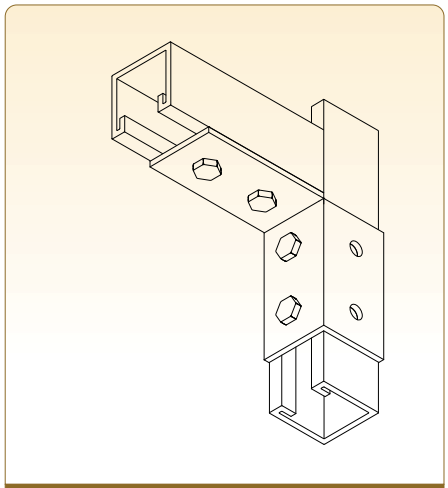

W-602

8-Hole Clevis Conn.

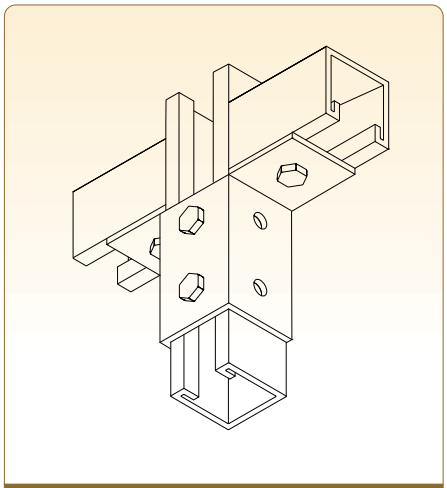

W-801

12-Hole Triple Angle Conn.

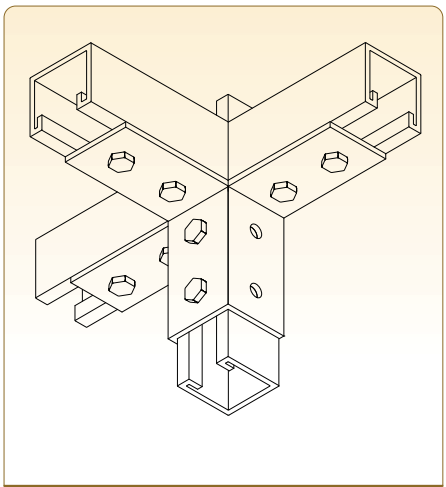

W-1201

8-Hole Double Corner Angle

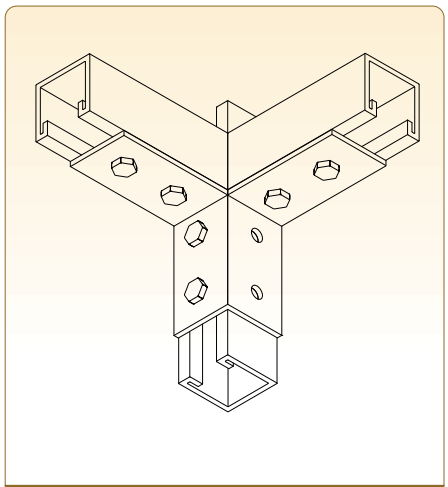

W-802

8-Hole Wing Fitting

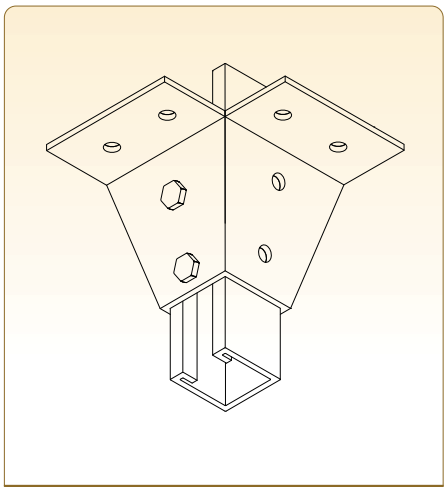

W-803

Leg Attachment Fitting

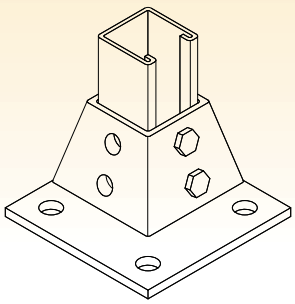

P-401

3-Hole Post Base

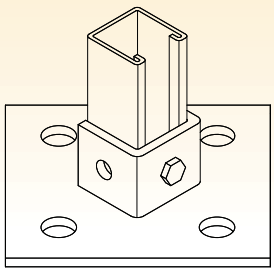

P-301

9-Hole Post Base

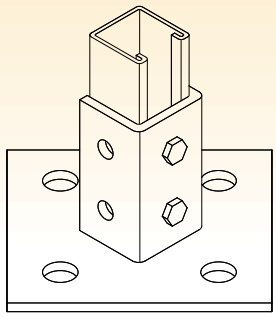

P-601

8-Hole Post Base

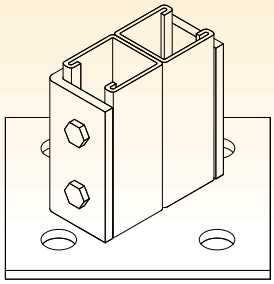

P-801

4-Hole Post Base

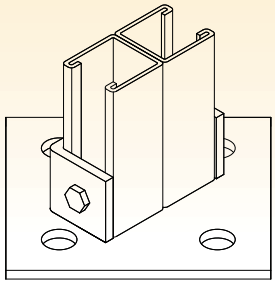

P-401

4-Hole Post Base

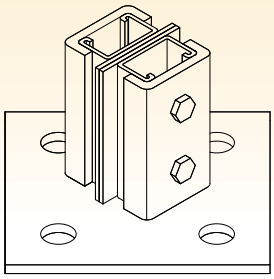

P-402

Post Base

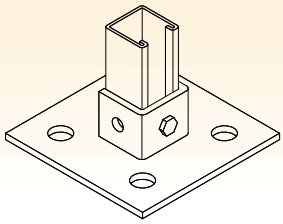

3-Hole Post Base

P-311

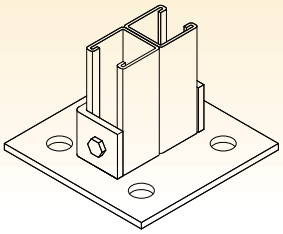

4-Hole Post Base

P-411

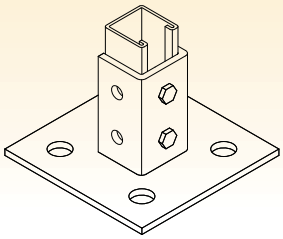

6-Hole Post Base

P-611

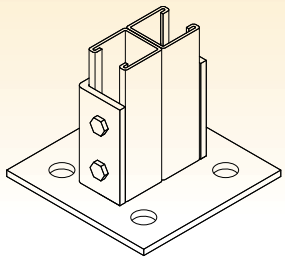

8-Hole Post Base

P-811

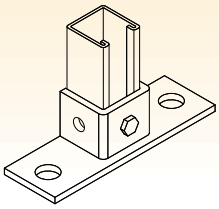

3-Hole Post Base

P-312

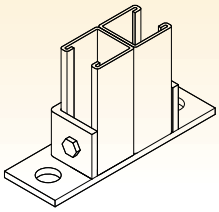

4-Hole Post Base

P-412

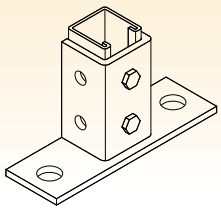

6-Hole Post Base

P-612

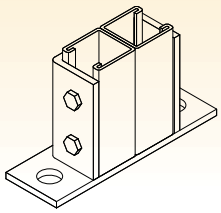

8-Hole Post Base

P-812

Angular Beam Clamp

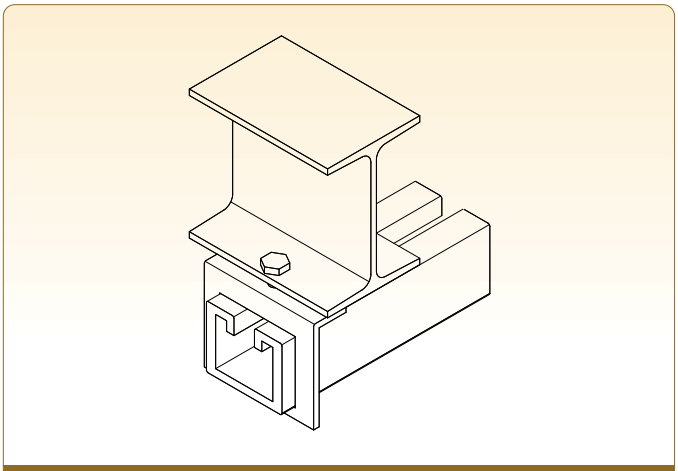

ABC-1

Beam Clamp U-bolt

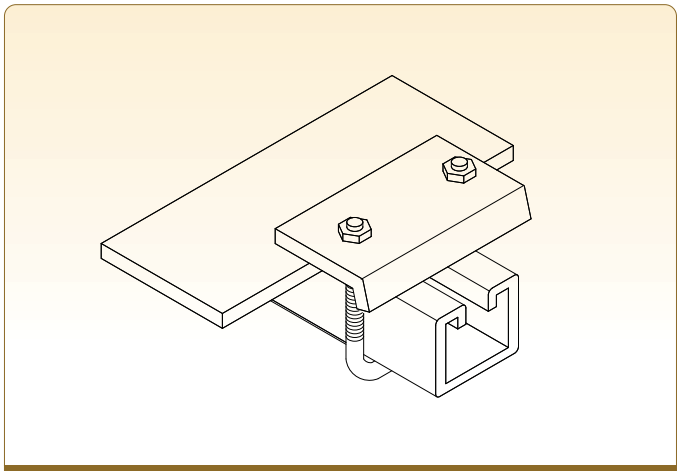

UBC-1

Beam Clamp

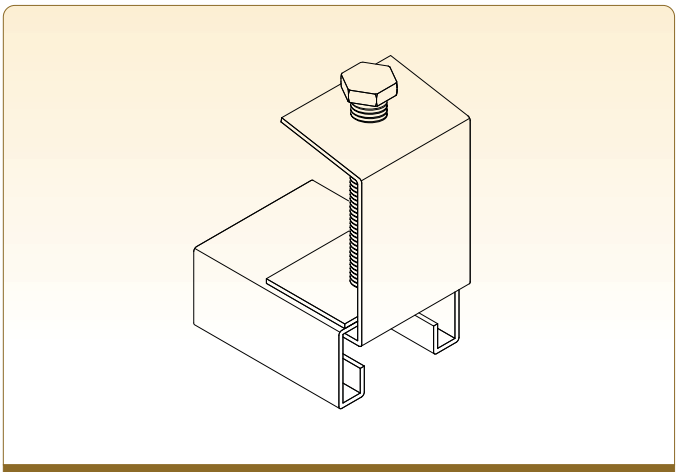

CBC-1

Beam Clamp 2 Bracket

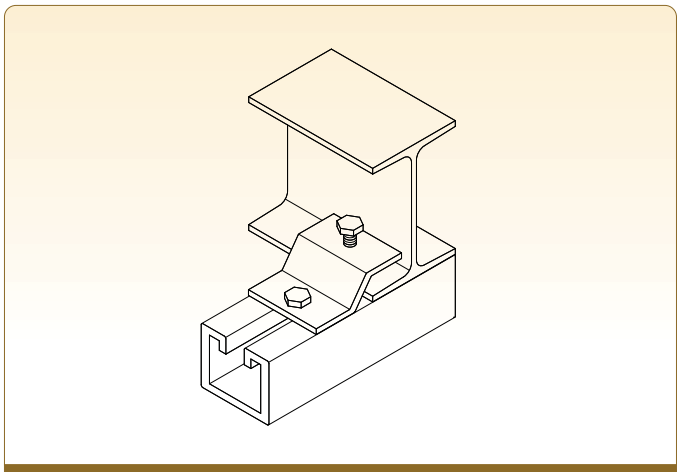

ZBC-1

Beam Clamp with Set Screw

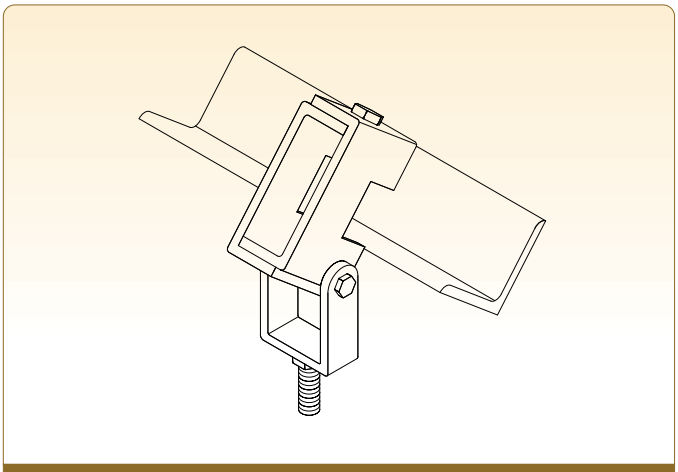

BCS

Beam Clamp Swivel Net

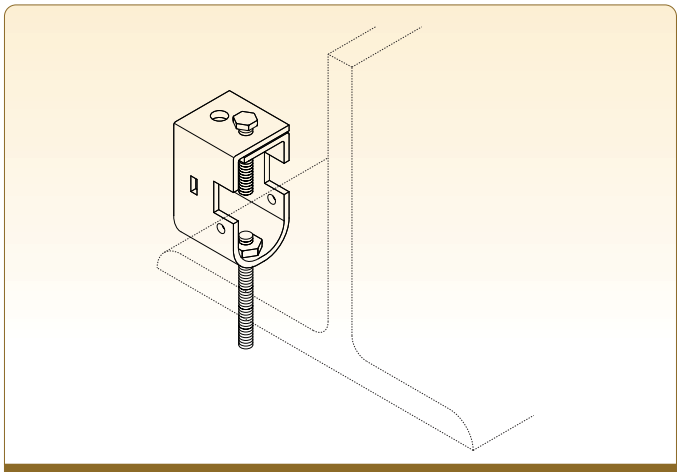

BCSN

Adjust Able Pipe Hanger

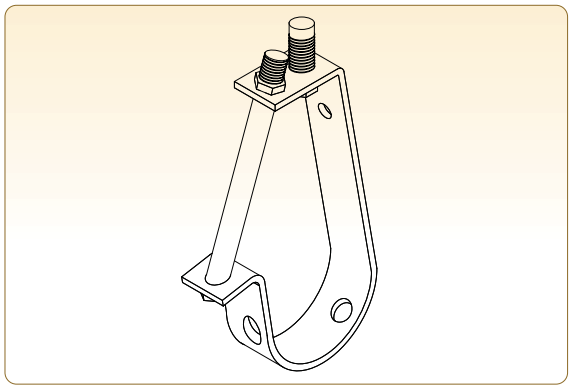

Item No	Size	A	B	Item No	Size	A	B
APH–$\frac{3}{4}$"	$\frac{1}{2}$"	$\frac{3}{8}$"	57	APH–$\frac{1}{2}$"	$\frac{1}{2}$"	$\frac{1}{2}$"	168
APH–$\frac{3}{4}$"	$\frac{3}{4}$"	$\frac{3}{8}$"	60	APH–$\frac{3}{4}$"	$\frac{3}{4}$"	$\frac{5}{8}$"	208
APH–1"	1"	$\frac{3}{8}$"	76	APH–4$\frac{1}{2}$"	4$\frac{1}{2}$"	$\frac{5}{8}$"	216
APH–1$\frac{1}{4}$"	1$\frac{1}{4}$"	$\frac{3}{8}$"	90	APH–5"	5"	$\frac{5}{8}$"	235
APH–1$\frac{1}{2}$"	1$\frac{1}{2}$"	$\frac{3}{8}$"	95	APH–6"	6"	$\frac{3}{4}$"	285
APH–2"	2"	$\frac{3}{8}$"	120	APH–7"	7"	$\frac{3}{4}$"	300
APH–2$\frac{1}{2}$"	2$\frac{1}{2}$"	$\frac{1}{2}$"	143	APH–8"	8"	$\frac{7}{8}$"	355
APH–3"	3"	$\frac{1}{2}$"	156	APH–9"	9"	$\frac{7}{8}$"	370

Clevis Hanger

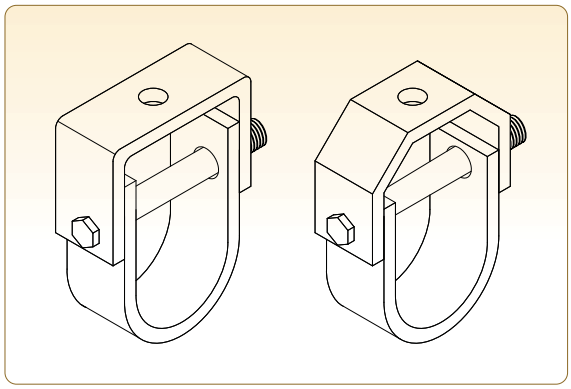

Item No	Size	A	B	Item No	Size	A	B
CH–$\frac{1}{2}$"	$\frac{1}{2}$"	$\frac{3}{8}$"	75	CH–3$\frac{1}{2}$"	3$\frac{1}{2}$"	$\frac{1}{2}$"	190
CH–$\frac{3}{4}$"	$\frac{3}{4}$"	$\frac{3}{8}$"	75	CH–4"	4"	$\frac{5}{8}$"	205
CH–1"	1"	$\frac{3}{8}$"	80	CH–5"	5"	$\frac{5}{8}$"	250
CH–1$\frac{1}{4}$"	1$\frac{1}{4}$"	$\frac{3}{8}$"	90	CH–6"	6"	$\frac{3}{4}$"	260
CH–1$\frac{1}{2}$"	1$\frac{1}{2}$"	$\frac{3}{8}$"	105	CH–8"	8"	$\frac{7}{8}$"	330
CH–2"	2"	$\frac{3}{8}$"	125	CH–10"	10"	$\frac{7}{8}$"	405
CH–2$\frac{1}{2}$"	2$\frac{1}{2}$"	$\frac{1}{2}$"	145	CH–12"	12"	$\frac{7}{8}$"	470
CH–3"	3"	$\frac{1}{2}$"	175	CH–14"	14"	1"	515

Pipe Hanger

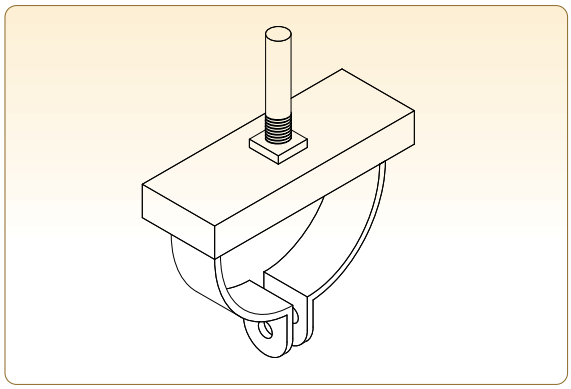

Item No	Size	A	B	Item No	Size	A	B
PH–$\frac{3}{8}$"	$\frac{3}{8}$"	$\frac{5}{16}$"	80	PH–3"	3"	$\frac{3}{8}$"	145
PH–$\frac{1}{2}$"	$\frac{1}{2}$"	$\frac{5}{16}$"	80	PH–3$\frac{1}{2}$"	3$\frac{1}{2}$"	$\frac{3}{8}$"	145
PH–$\frac{3}{4}$"	$\frac{3}{4}$"	$\frac{5}{16}$"	80	PH–4"	4"	$\frac{3}{8}$"	145
PH–1"	1"	$\frac{5}{16}$"	80	PH–4$\frac{1}{2}$"	4$\frac{1}{2}$"	$\frac{1}{2}$"	150
PH–1$\frac{1}{4}$"	1$\frac{1}{4}$"	$\frac{5}{16}$"	80	PH–5"	5"	$\frac{1}{2}$"	175
PH–1$\frac{1}{2}$"	1$\frac{1}{2}$"	$\frac{5}{16}$"	80	PH–6"	6"	$\frac{1}{2}$"	200
PH–2"	2"	$\frac{5}{16}$"	80	PH–7"	7"	$\frac{1}{2}$"	225
PH–2$\frac{1}{2}$"	2$\frac{1}{2}$"	$\frac{3}{8}$"	145	PH–8"	8"	$\frac{1}{2}$"	250

Swibel Ring Hanger

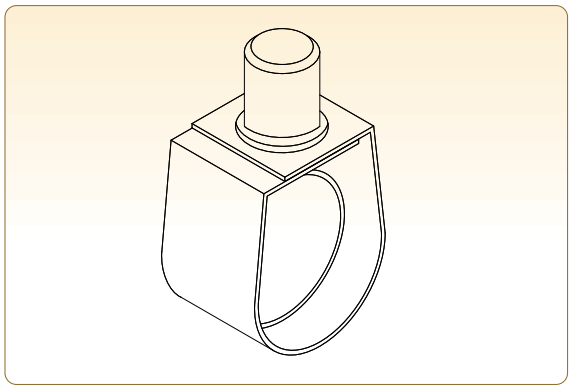

Item No	Size	A	B	Item No	Size	A	B
SRH–$\frac{1}{2}$"	$\frac{1}{2}$"	$\frac{3}{8}$"	75	SRH–3$\frac{1}{2}$"	3$\frac{1}{2}$"	$\frac{1}{2}$"	180
SRH–$\frac{3}{4}$"	$\frac{3}{4}$"	$\frac{3}{8}$"	85	SRH–4"	4"	$\frac{5}{8}$"	200
SRH–1"	1"	$\frac{3}{8}$"	85	SRH–5"	5"	$\frac{5}{8}$"	250
SRH–1$\frac{1}{4}$"	1$\frac{1}{4}$"	$\frac{3}{8}$"	90	SRH–6"	6"	$\frac{3}{4}$"	260
SRH–1$\frac{1}{2}$"	1$\frac{1}{2}$"	$\frac{3}{8}$"	100	SRH–8"	8"	$\frac{7}{8}$"	320
SRH–2"	2"	$\frac{3}{8}$"	105	SRH–10"	10"	$\frac{7}{8}$"	400
SRH–2$\frac{1}{2}$"	2$\frac{1}{2}$"	$\frac{1}{2}$"	125	SRH–12"	12"	$\frac{7}{8}$"	450
SRH–3"	3"	$\frac{1}{2}$"	150	SRH–14"	14"	1"	500

Pipe Riser Support

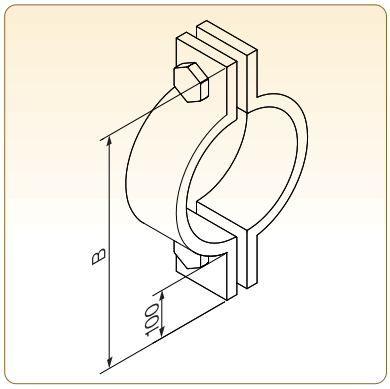

Item No	Size	B
PRS–$\frac{1}{2}$"	$\frac{1}{2}$"	240
PRS–$\frac{3}{4}$"	$\frac{3}{4}$"	250
PRS–1"	1"	259
PRS–1$\frac{1}{4}$"	1$\frac{1}{4}$"	250
PRS–1$\frac{1}{2}$"	1$\frac{1}{2}$"	265
PRS–2"	2"	20
PRS–2$\frac{1}{2}$"	2$\frac{1}{2}$"	280
PRS–3"	3"	300
PRS–4"	4"	350

Pipe Strap

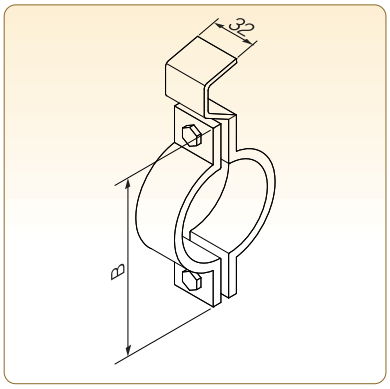

Item No	Size	B
PS–$\frac{1}{2}$"	$\frac{1}{2}$"	75
PS–$\frac{3}{4}$"	$\frac{3}{4}$"	80
PS–1"	1"	85
PS–1$\frac{1}{4}$"	1$\frac{1}{4}$"	95
PS–1$\frac{1}{2}$"	1$\frac{1}{2}$"	100
PS–2"	2"	130
PS–2$\frac{1}{2}$"	2$\frac{1}{2}$"	150
PS–3"	3"	170
PS–4"	4"	200

Pipe Bracket

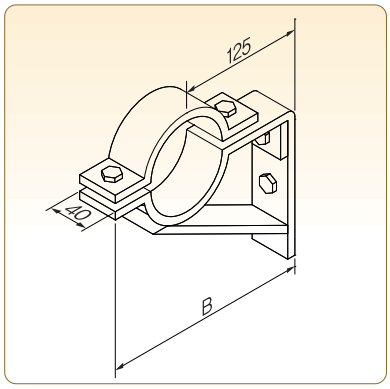

Item No	Size	B
PB–$\frac{1}{2}$"	$\frac{1}{2}$"	150
PB–$\frac{3}{4}$"	$\frac{3}{4}$"	155
PB–1"	1"	160
PB–1$\frac{1}{4}$"	1$\frac{1}{4}$"	165
PB–1$\frac{1}{2}$"	1$\frac{1}{2}$"	170
PB–2"	2"	180
PB–2$\frac{1}{2}$"	2$\frac{1}{2}$"	190
PB–3"	3"	220
PB–4"	4"	270

Conduit Hanger

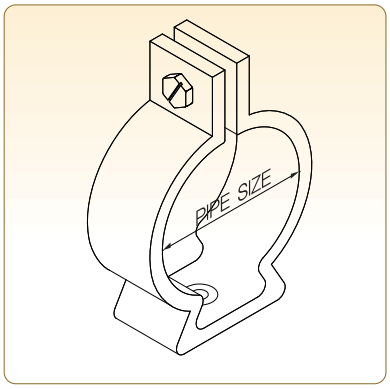

Item No	Size	A
CDH–$\frac{1}{2}$"	$\frac{1}{2}$"	$\frac{1}{4}$"
CDH–$\frac{3}{4}$"	$\frac{3}{4}$"	$\frac{1}{4}$"
CDH–1"	1"	$\frac{1}{4}$"
CDH–1$\frac{1}{4}$"	1$\frac{1}{4}$"	$\frac{1}{4}$"
CDH–1$\frac{1}{2}$"	1$\frac{1}{2}$"	$\frac{5}{16}$"
CDH–2"	2"	$\frac{5}{16}$"
CDH–2$\frac{1}{2}$"	2$\frac{1}{2}$"	$\frac{5}{16}$"
CDH–3"	3"	$\frac{5}{16}$"
CDH–4"	4"	$\frac{1}{2}$"

2-Piele Pipe Strap

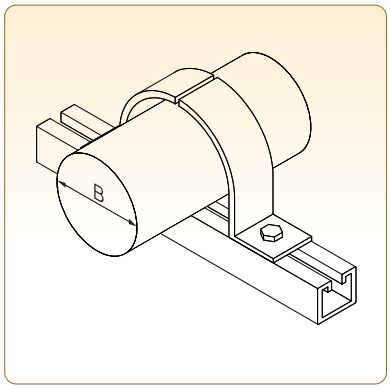

Item No	Size	B
PPS–$\frac{1}{2}$"	$\frac{1}{2}$"	
PPS–$\frac{3}{4}$"	$\frac{3}{4}$"	
PPS–1"	1"	34
PPS–1$\frac{1}{4}$"	1$\frac{1}{4}$"	43
PPS–1$\frac{1}{2}$"	1$\frac{1}{2}$"	48
PPS–2"	2"	60
PPS–2$\frac{1}{2}$"	2$\frac{1}{2}$"	73
PPS–3"	3"	89
PPS–4"	4"	114

Pipe Strap

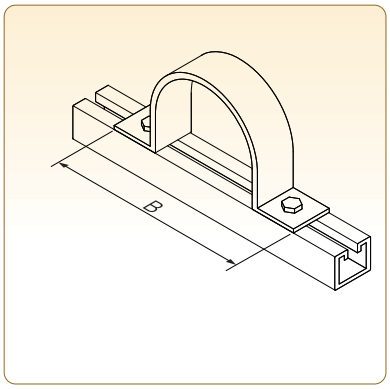

Item No	Size	B
PSU–$\frac{1}{2}$"	$\frac{1}{2}$"	70
PSU–$\frac{3}{4}$"	$\frac{3}{4}$"	76
PSU–1"	1"	90
PSU–1$\frac{1}{4}$"	1$\frac{1}{4}$"	95
PSU–1$\frac{1}{2}$"	1$\frac{1}{2}$"	100
PSU–2"	2"	145
PSU–2$\frac{1}{2}$"	2$\frac{1}{2}$"	155
PSU–3"	3"	170
PSU–4"	4"	195

Tubing Climp

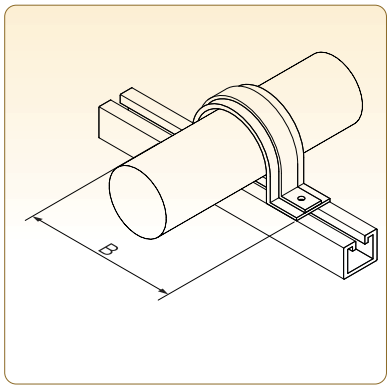

Item No	Size	B
TC–$\frac{1}{2}$"	$\frac{1}{2}$"	40
TC–$\frac{3}{4}$"	$\frac{3}{4}$"	50
TC–1"	1"	60

Pipe Block

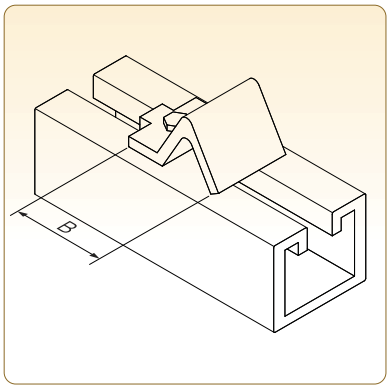

Item No	Size	B
PBK–$\frac{1}{2}$"	$\frac{1}{2}$"	50
PBK–$\frac{3}{4}$"	$\frac{3}{4}$"	60
PBK–1"	1"	75

Size Range : ½"~14"
All Pipe and Bolt Size
: Represented by Inch
All Pipe Hanger Dimension
: Represented by Millimeter
Material : Carbon Steel
Standard Finish
: Block, Electro-galaized or Hot Dip Gal, After Fabrication

Pipe & Tubing Clamp

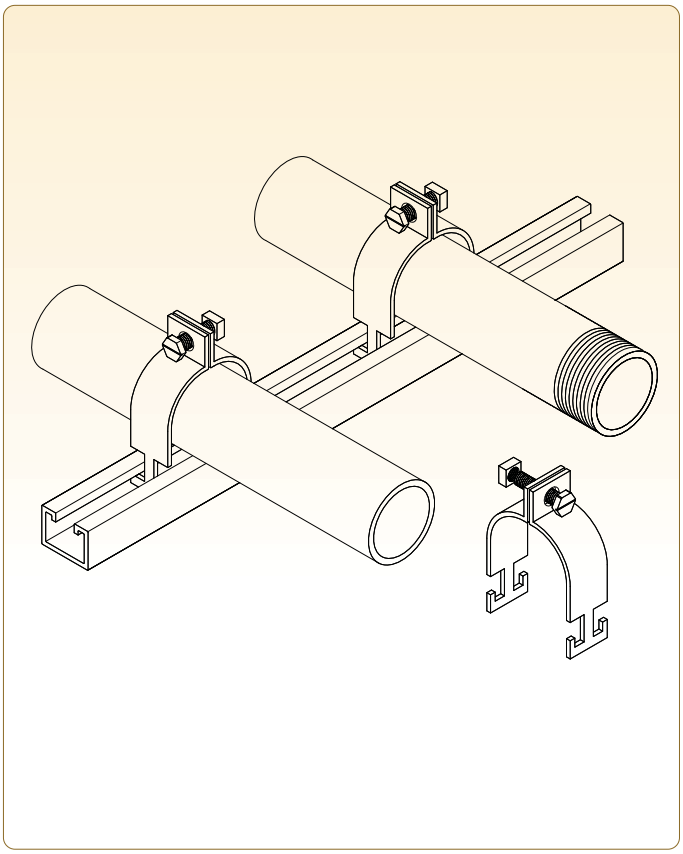

Item No	Pipe Size		Inside Dia
TBC–$\frac{1}{2}$"	16	$\frac{1}{2}$"	20 ~ 22
TBC–$\frac{3}{4}$"	22	$\frac{3}{4}$"	25 ~ 29
TBC–1"	28	1"	32 ~ 36
TBC–1$\frac{1}{4}$"	36	1$\frac{1}{4}$"	39 ~ 43
TBC–1$\frac{1}{2}$"	42	1$\frac{1}{2}$"	46 ~ 50
TBC–2"	54	2"	57 ~ 61
TBC–2$\frac{1}{2}$"	70	2$\frac{1}{2}$"	73 ~ 77
TBC–3"	82	3"	85 ~ 89
TBC–3$\frac{1}{2}$"	90	3$\frac{1}{2}$"	96 ~ 102
TBC–4"	104	4"	107 ~ 115
TBC–5"	131	5"	120 ~ 142
TBC–6"	156	6"	146 ~ 170
TBC–8"	207	8"	
TBC–10"	260	10"	

Cable Clamp

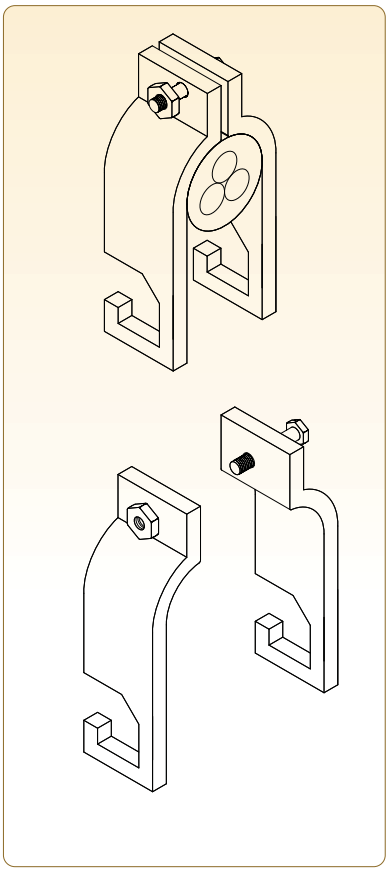

Item No	Cable O.D.
CCP–1.25	1.00" ~ 1.25"
CCP–1.5	1.25" ~ 1.50"
CCP–1.75	1.59" ~ 1.75"
CCP–2.0	1.75" ~ 2.00"
CCP–2.25	2.00" ~ 2.25"
CCP–2.5	2.25" ~ 2.50"
CCP–2.75	2.50" ~ 2.75"
CCP–3.0	2.75" ~ 3.00"
CCP–3.25	3.00" ~ 3.25"
CCP–3.5	3.25" ~ 3.50"
CCP–3.75	3.50" ~ 3.75"
CCP–4.0	3.75" ~ 4.00"
CCP–4.25	4.00" ~ 4.25"
CCP–4.5	4.25" ~ 4.50"
CCP–4.75	4.50" ~ 4.75"
CCP–5	4.75" ~ 5.00"

P-Type Clamp

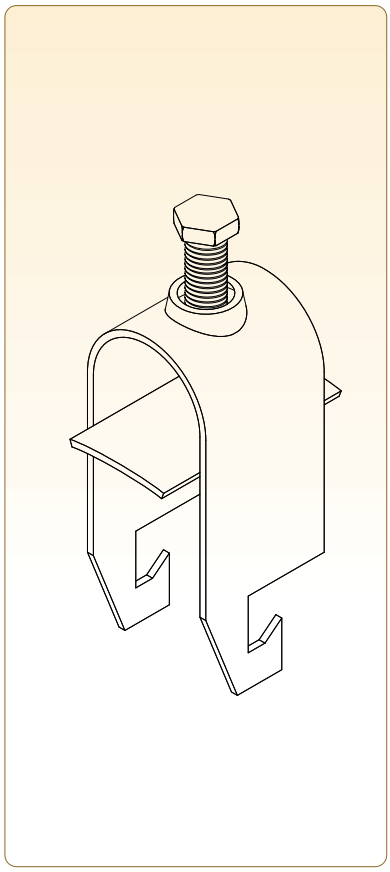

Item No	Pipe Size	B
TCP–$\frac{3}{8}$"	$\frac{3}{8}$"	44.5
TCP–$\frac{1}{2}$"	$\frac{1}{2}$"	51.0
TCP–$\frac{3}{4}$"	$\frac{3}{4}$"	57.0
TCP–1"	1"	63.5
TCP–1$\frac{1}{4}$"	1$\frac{1}{4}$"	70.0
TCP–1$\frac{1}{2}$"	1$\frac{1}{2}$"	76.0
TCP–2"	2"	82.5
TCP–2$\frac{1}{2}$"	2$\frac{1}{2}$"	100.0
TCP–3"	3"	114.0
TCP–3$\frac{1}{2}$"	3$\frac{1}{2}$"	127.0
TCP–4"	4"	143.0
TCP–5"	5"	170.0
TCP–6"	6"	200.0
TCP–7"	7"	230.0
TCP–8"	8"	270.0
TCP–10"	10"	44.0

10. Barrier Strip (Separator)

Item Numbering

SEP DS – 6H 3L

- **SEP** : Separator
- **DS** : Straight
- **VO** : Vertical Outside Bend
- **VI** : Vertical Inside Bend
- **6H** : Height 60
- **3L** : Length 3000

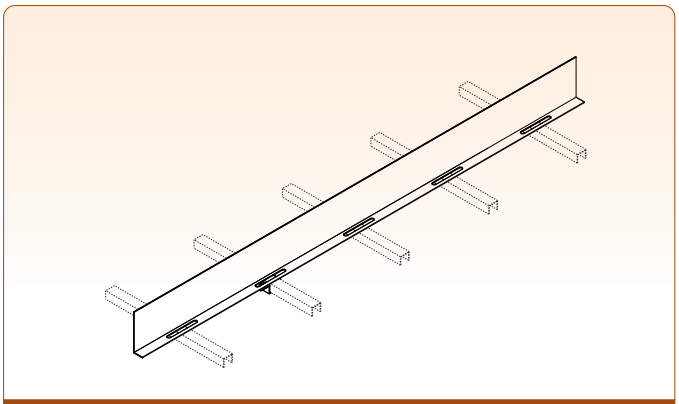

SEPST

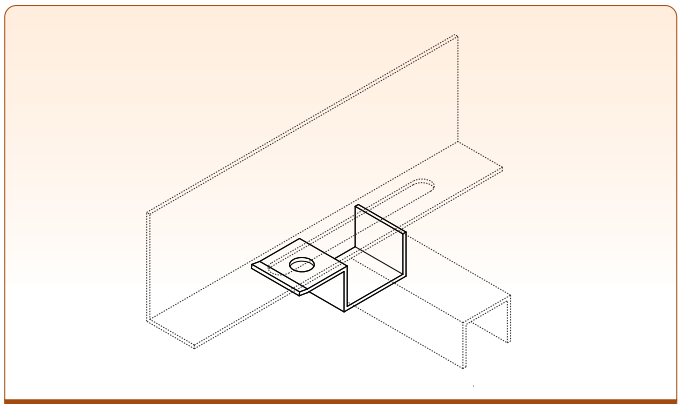

SEPSC

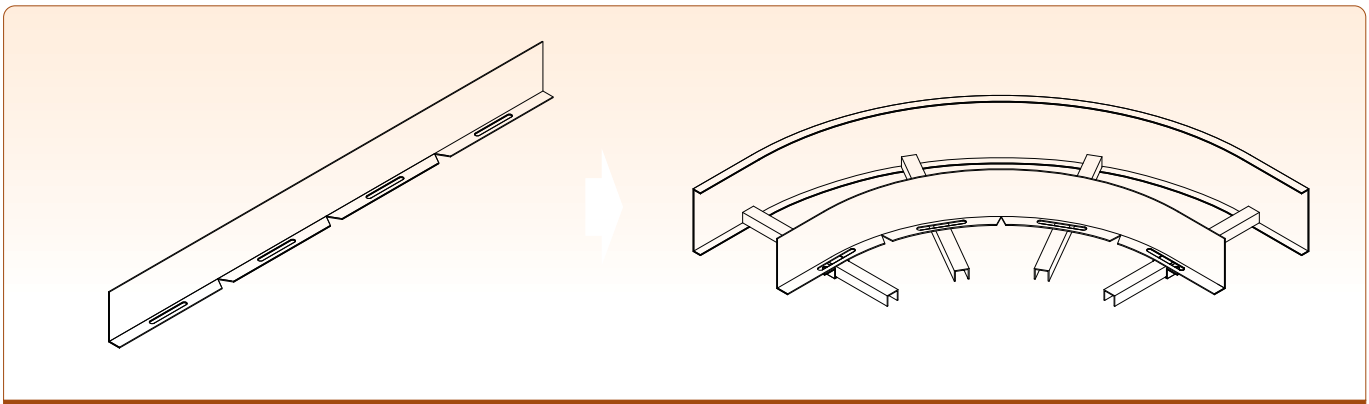

SEPHB

Barrier Strip Vertical Bend

- 90SEPVO
- 60SEPVO
- 45SEPVO
- 30SEPVO

Barrier Strip Vertical Bend

- 90SEPVI
- 60SEPVI
- 45SEPVI
- 30SEPVI

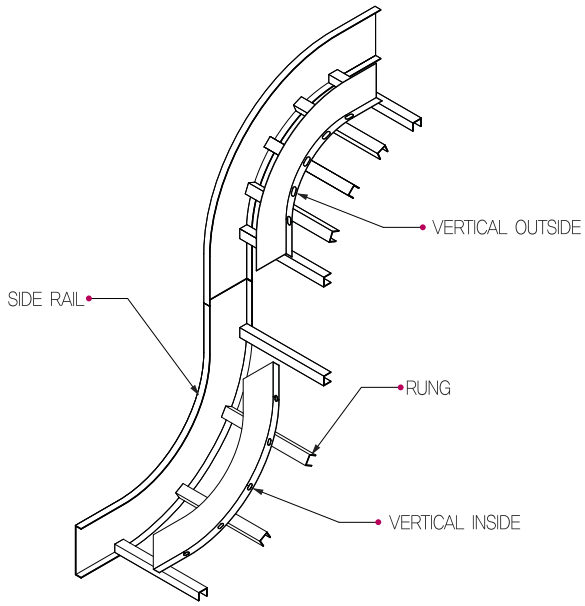

11. Connection Device

Item Numbering

C S B N – M 10 X 25L

- **Type** : Connection Shank Bolt
  Nut
  Flange Nut
  Plane Washer
  Spring Washer
  Hex Bolt &Nut with 3 Washer
  Hex Bolt
  Round Bolt
  U-Bolt
  J-Bolt
  Wing Bolt
  Wing Nut

- **M(*)** Diameter(mm) (6,8,10,12,14)
  (*)L : Length (20,25,30,35,40,50,55)

Shank Bolt

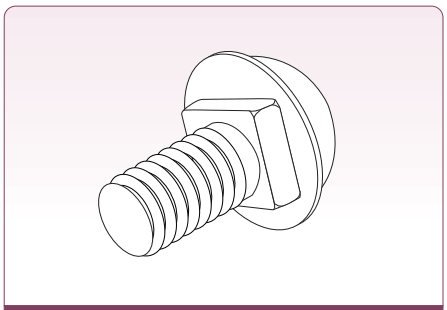

CSB-M(*)x(*)L

Nut

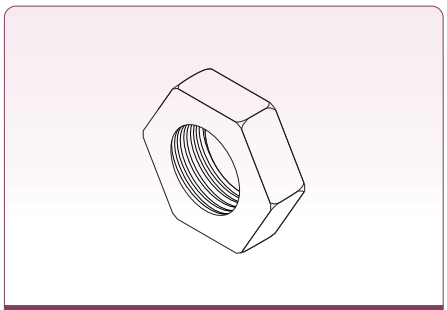

CSN- M(*)

Flange Nut

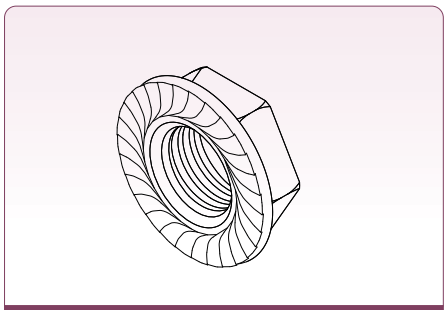

CFN-M(*)

Plane Washer

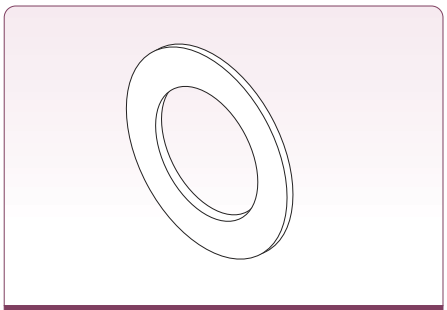

CPW- M(*)

Spring Washer

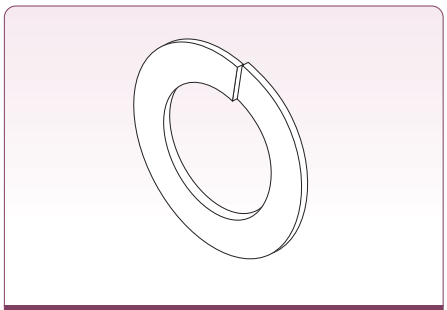

CSW-M(*)

Hex Bolt & Nut with 3 Washer

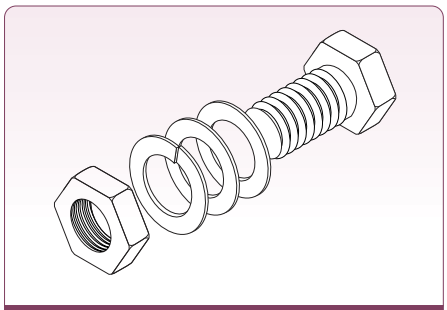

CHBN- M(*)x(*)L

Hex Bolt

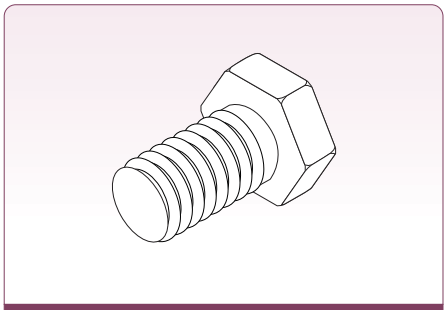

CHB- M(*)x(*)L

Round Head Bolt

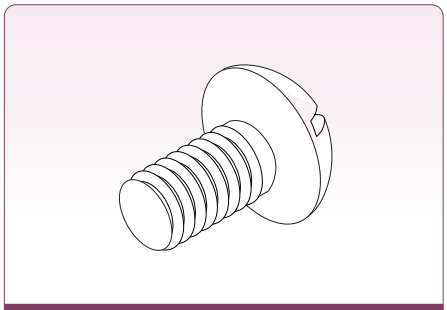

CRB-M(*)x(*)L

U-Bolt

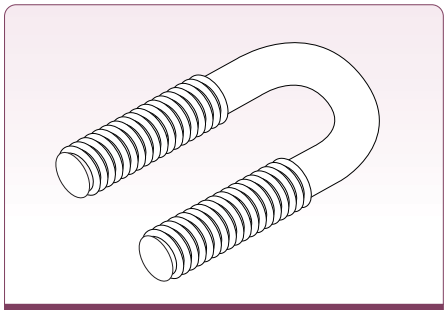

CUB- M(*)x(*)L

J-Bolt

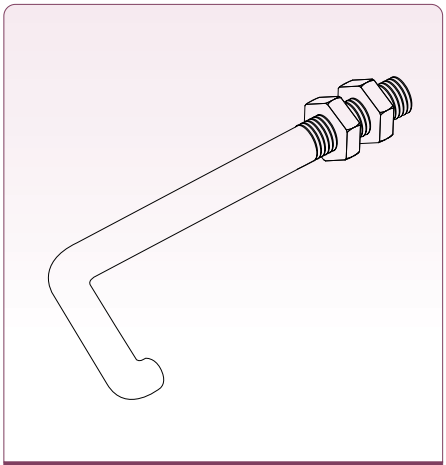

CJO-M(*)x(*)L

Wing Bolt

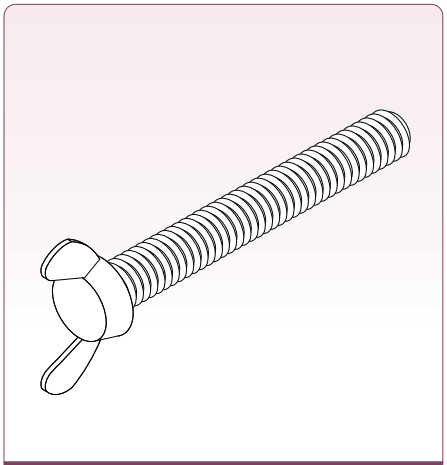

CWB-M(*)x(*)L

Wing Nut

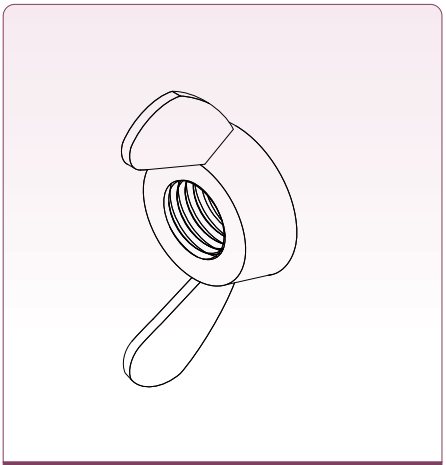

CWN-M(*)

Channel Spring Nut

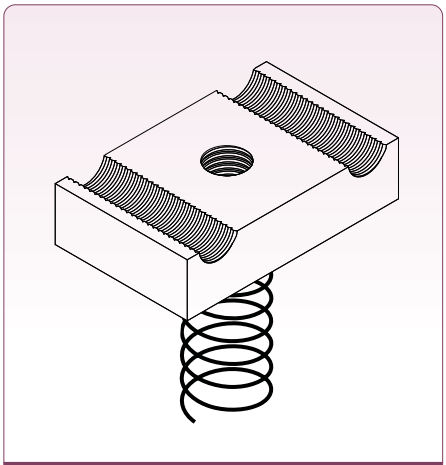

CPN-M(*)x(*)L

Rod Coupler Nut

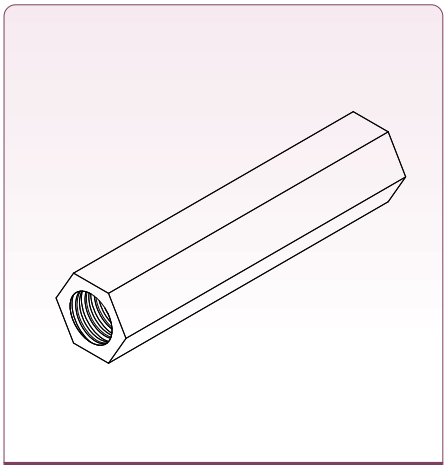

CCN--M(*)x(*)L

Grounding Bonding Jumper

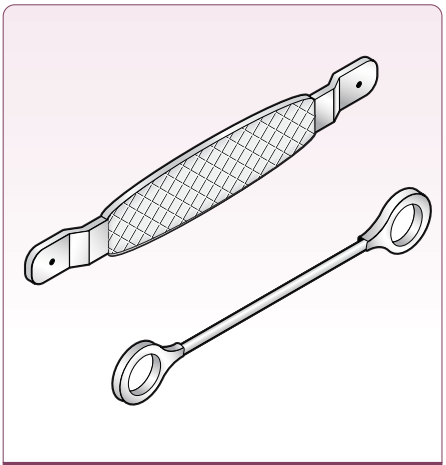

CBJ-(*)SQx(*)L

Thread Rod

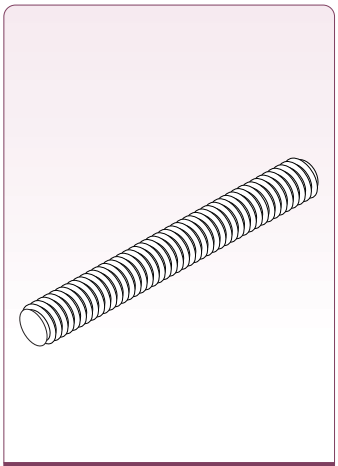

CTR-M(*)x(*)L

Set Anchor

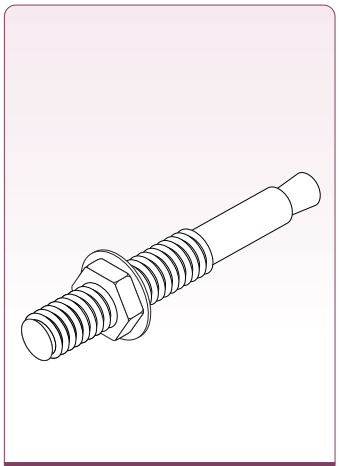

CAE-M(*)x(*)L

Strong Anchor

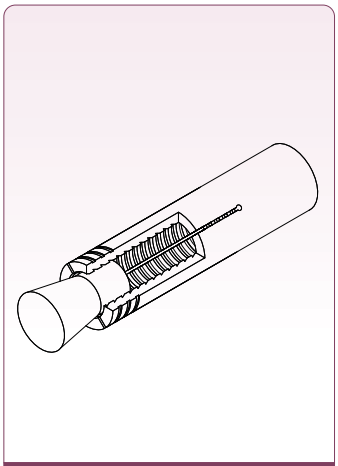

CAS-M(*)x(*)L

Chemical Anchor

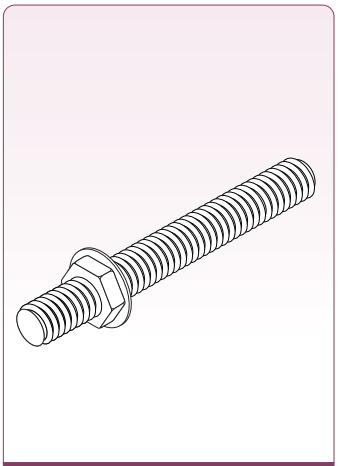

CAC-M(*)x(*)L

MEMO

MEMO

MEMO

MEMO

MEMO

SNC CO.,LTD.

201, Yuha-ro, Gimhae-si, Gyeongsangnam-do, 621-270 Korea
TEL : +82-55-327-0683~5 FAX : +82-55-327-3033
Home Page : www.snckr.com